MODERN WELDING TECHNIQUES AND THERMAL SPRAY DEPOSITION PROCESSES

A REVIEW

BY

D. G. CROSS, C.ENG., M.I.MECH.E., F.I.MAR.E., R.C.N.C.
(*Ship Department*)

Inroduction

The process of electric arc welding is reputed to have been invented by Oscar Kjellberg in 1877 and first used commercially around 1880. It was not until about 1916 or 1917 that the Royal Navy decided that the process might offer some benefit and various trials were undertaken on repairs to boilers, propeller shafts and a variety of cast-iron items. The equipment was by modern standards crude and electrodes somewhat primitive but nevertheless they adequately demonstrated the principle of electric arc welding. FIGS. 1 and 2 show in part a submission from the Engineer-in-Chief to the Controller dated November 1917 and a report from the Admiral Superintendent of Devonport Dockyard to the Secretary of the Admiralty dated August 1918 indicating the growing interest and success in the welding process for naval equipment. Since those days the ships and equipment of the Royal Navy have become more sophisticated and it is hoped that this article will demonstrate that progress has indeed been made in the art of welding in order to meet this sophistication. It is intended to illustrate present day techniques and developments and some of the future trends.

Most engineers are very familiar with the now established electric welding processes, both with and without inert gas shielding and using various means of feeding metal for fusion or deposition. These are now common techniques found throughout the engineering industry both in factory and in the field and it is the newer and developing welding processes which are now being studied by the Ship Department for application to naval requirements.

The process of metal deposition by spraying has gone through a period of poor repute but new techniques and procedures are enabling the process to become reliably established. Complementary to metallic deposition, the deposition of ceramics and cermets have also become important processes and these too are being evaluated.

Welding Processes under Development and Evaluation

Electron Beam Welding

This is a process which has been commercially available for many years. It is now being studied and evaluated with a view to its application to certain fabrication problems that exist with new or composite materials now coming into service. The principles of the process are well established and these are illustrated diagrammatically in FIG. 3. Basically the system is for electrons to be emitted from a head filament and accelerated by high voltage to a velocity in excess of $1{\cdot}6 \times 10^8$ m/s under conditions of high vacuum. The electrons are magnetically formed into a beam only a few tenths of a millimetre in diameter, producing a power intensity of some $5{\cdot}76 \times 10^6$ watts/cm^2, more than 5000 times greater than that achieved with a conventional electric arc.

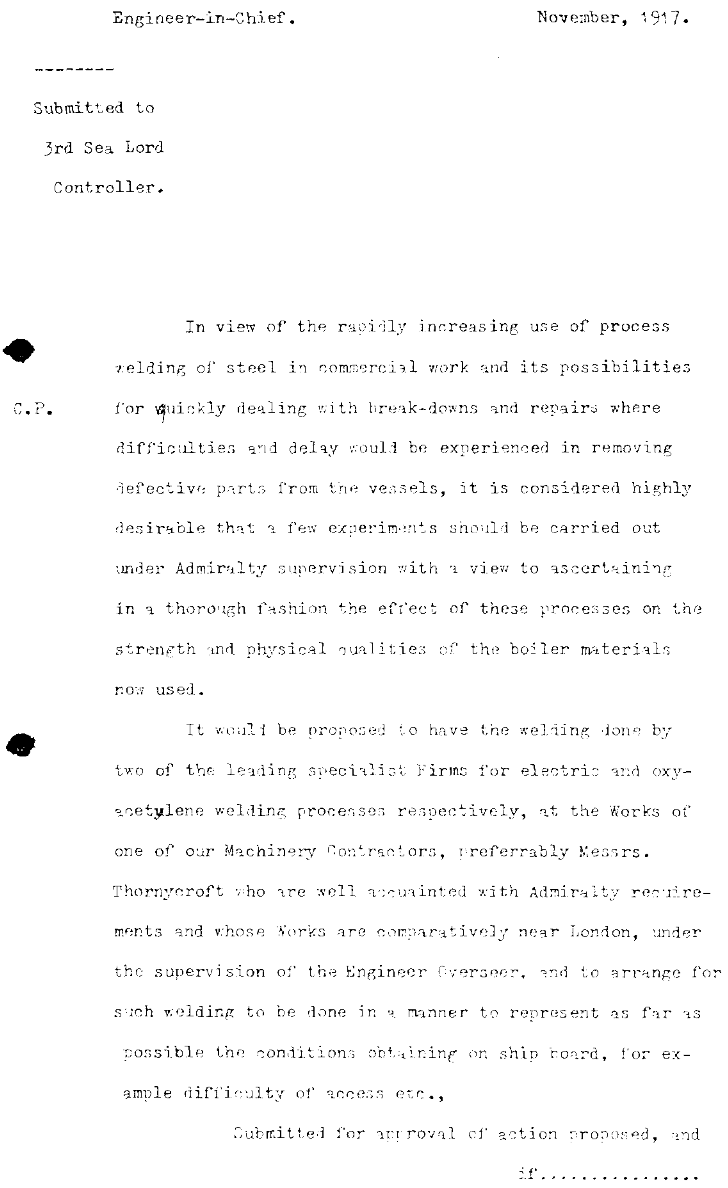

Engineer-in-Chief. November, 1917.

Submitted to
3rd Sea Lord
Controller.

C.P.

In view of the rapidly increasing use of process welding of steel in commercial work and its possibilities for quickly dealing with break-downs and repairs where difficulties and delay would be experienced in removing defective parts from the vessels, it is considered highly desirable that a few experiments should be carried out under Admiralty supervision with a view to ascertaining in a thorough fashion the effect of these processes on the strength and physical qualities of the boiler materials now used.

It would be proposed to have the welding done by two of the leading specialist Firms for electric and oxy-acetylene welding processes respectively, at the Works of one of our Machinery Contractors, preferrably Messrs. Thornycroft who are well acquainted with Admiralty requirements and whose Works are comparatively near London, under the supervision of the Engineer Overseer, and to arrange for such welding to be done in a manner to represent as far as possible the conditions obtaining on ship board, for example difficulty of access etc.,

Submitted for approval of action proposed, and if................

FIG. 1

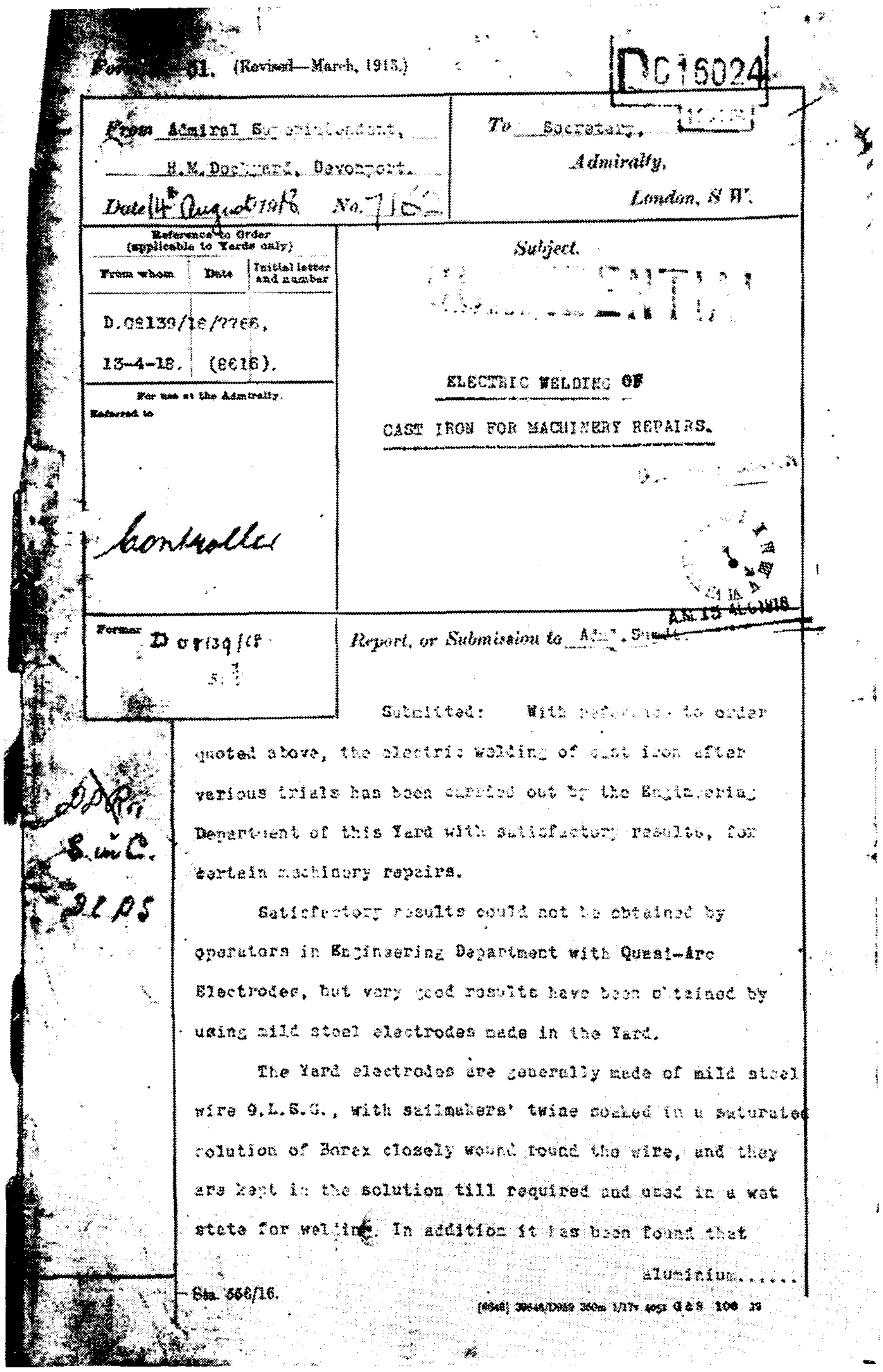

Form [illegible] 51. (Revised—March, 1913.)

DC16024

From Admiral Superintendent,
H.M. Dockyard, Devonport.
Date 14th August 1918 No. 7162

To Secretary,
Admiralty,
London, S.W.

Reference to Order (applicable to Yards only)

From whom	Date	Initial letter and number
D.08139/18/7766,		
13-4-18.	(8616).	

For use at the Admiralty.
Referred to
Controller

Former D 08139/18
5

Subject.

CONFIDENTIAL

ELECTRIC WELDING OF CAST IRON FOR MACHINERY REPAIRS.

A.N. 15 AUG 1918

Report, or Submission to Adm. Supt.

DDR
S. in C.
21 PS

Submitted: With reference to order quoted above, the electric welding of cast iron after various trials has been carried out by the Engineering Department of this Yard with satisfactory results, for certain machinery repairs.

Satisfactory results could not be obtained by operators in Engineering Department with Quasi-Arc Electrodes, but very good results have been obtained by using mild steel electrodes made in the Yard.

The Yard electrodes are generally made of mild steel wire 9.L.S.G., with sailmakers' twine soaked in a saturated solution of Borax closely wound round the wire, and they are kept in the solution till required and used in a wet state for welding. In addition it has been found that

aluminium......

Sta. 566/16. [6546] 30648/D889 360m 1/17 4053 G & S 100 13

FIG. 2

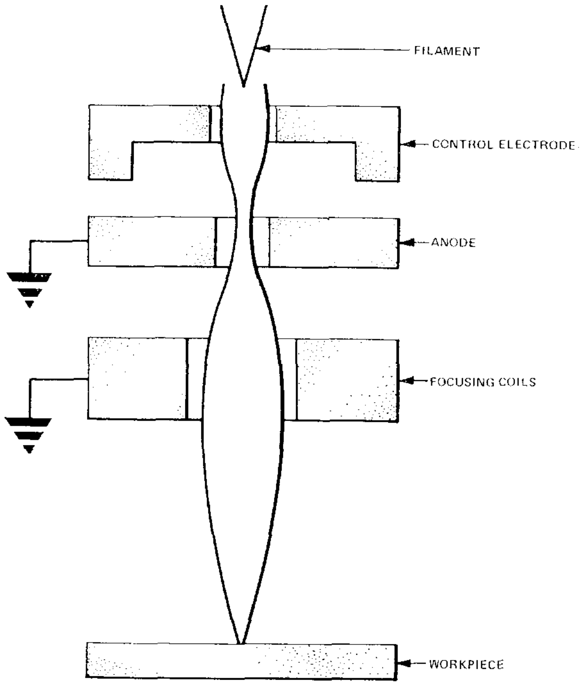

FIG. 3—SIMPLE DIAGRAMMATIC REPRESENTATION OF AN ELECTRON GUN

The precisely controlled beam is aligned on to a work piece using a magnifying viewer system that looks down the beam. The impact of the electron on to the work piece generates heat and instantaneously melts the material over a very small zone. The kinetic energy of the electrons ensures good penetration so that heat is generated instantaneously across the full width of the joint face without any dependence upon conduction.

Traversing the work piece with precision servo-operated work-handling equipment and/or deflecting the beam enables a continuous weld to be produced with consistently high quality at rates up to 3800 cm/min. Alternatively using slower speeds on greater material thicknesses welds can still be achieved in a single pass. A typical arrangement is shown in FIG. 4.

Because heat is generated at such a high rate right across the joint face, only the minimum amount of material necessary for fusion is melted thus producing a joint of maximum strength and virtually no distortion.

A particular advantage of electron beam welding is that it generates only a very small heat-affected zone (HAZ). This characteristic is advantageous particularly with materials having a tendency to undergo permanent degeneration in strength and metallurgical properties during conventional welding. The shape of the fusion zone in electron beam welds also assists in controlling distortion. Since the fusion boundary is perpendicular to the weld surface distortion stresses are axial rather than angular. Further, since the volume of solidifying weld metal is small, the inherent stress build up is less than with normal welding. The low distortion of electron beam welded assemblies can prove of considerable benefit by reducing the number of jigs required compared with the number required by more conventional welding methods. The system equipment comprises an electron gun which is fed with electrical supplies, and a control unit. These components remain more or less electrically and physically identical regardless of the size of work chamber with which they operate.

The generation of a beam of electrons must take place in a high vacuum (10^{-4} torr) but the welding process may take place within or outside of this vacuum. Welding in a vacuum chamber with a work piece inside the chamber

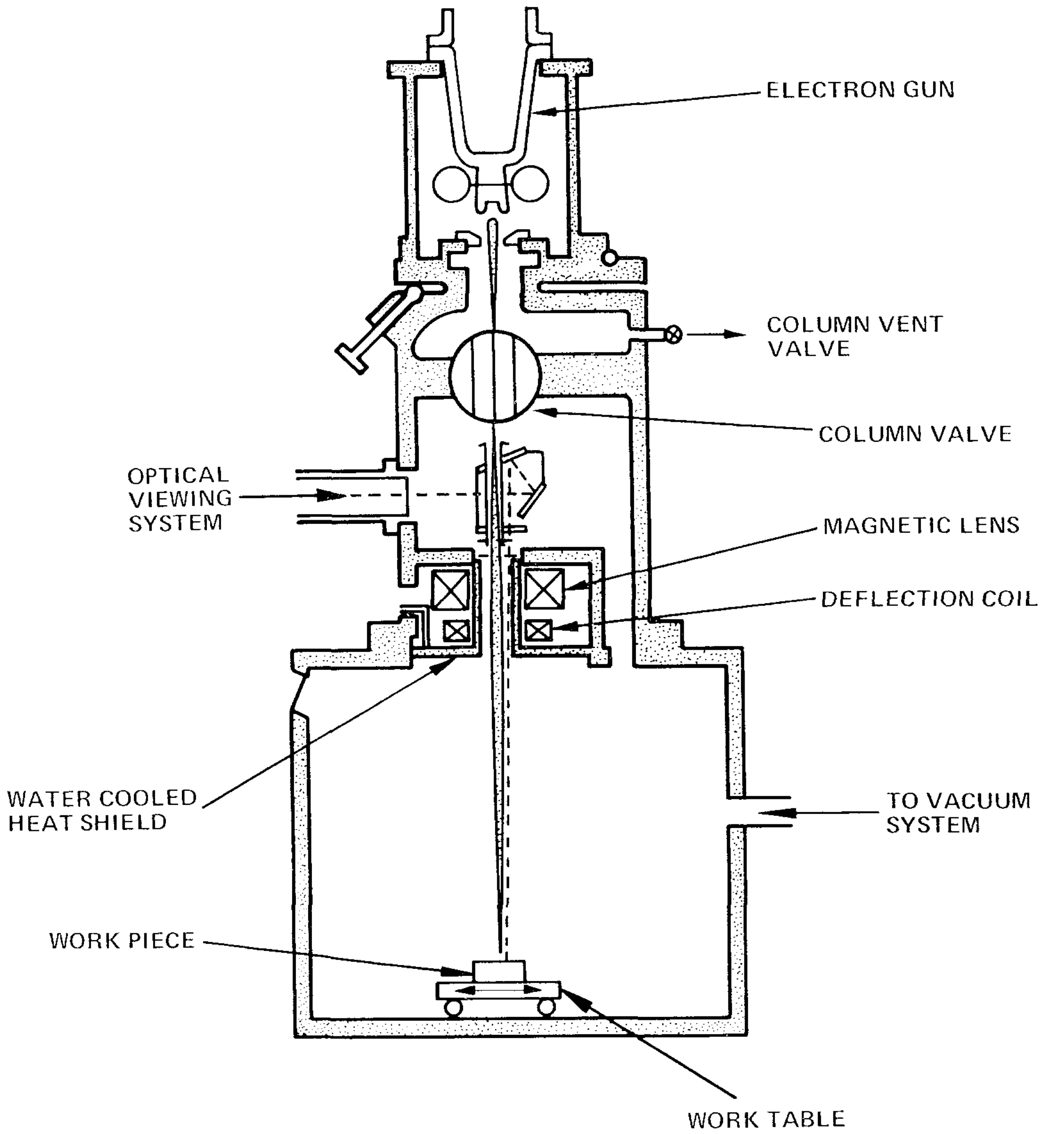

FIG. 4—AN ELECTRON BEAM GUN FOCUSING ON A WORKPIECE INSIDE THE VACUUM CHAMBER

is the normal conception of electron beam welding but in certain cases the beam can be projected from an orifice in the electron gun vacuum enclosure to form out-of-vacuum welds. In this case the maximum useful length of beam is about 25 mm.

The size of the work piece determines the size of the vacuum chamber required and this can vary in size from about 0·17 m^3 to 23 m^3. The same type of electron gun and control is fitted over a wide range of machine sizes. A supporting vacuum pumping system is required to match the capacity of the chamber.

There are three main areas in which electron beam welding can be profitably used. Firstly, by replacing the conventional single and multi-pass welding processes with a single high penetration weld thereby improving product quality and increasing productivity. Electron beam welding facilitates the fabrication of high-tensile materials which, due to the low heat input of the weld, retain their mechanical properties. Secondly, by replacing other mechanical joining processes such as riveting, bolting, etc. In this context, electron beam welding simplifies joint design and manufacture, allowing joints to be made very close to delicate components without fear of damage or distortion by thermal stresses.

Finally, it enables precision fabrications to be produced in place of expensive machined components or castings.

The almost total absence of distortion from welds produced by electron beams together with the ability to deal with high-strength materials of varying thicknesses, creates a new technology for the production of complex components by welding together small finish-machined sub-units. The technique offers a considerable manufacturing cost saving with reductions in manufacturing timescales. With the introduction into naval service of composite clad materials, the joining together of sub-components can be accomplished using electron beam welding, and evaluation and development is proceeding along this particular line.

The electron beam welding process has been restricted in application owing to the need for vacuum chambers to contain the parts to be welded. There are now methods available which claim to have extended the process to work pieces of any dimension by means of a localized vacuum in the region of the joint to be welded which is maintained throughout the travel along the joint. These welding machines can be manually operated and even the most powerful can be readily transported and produce both circular or linear welds. Present sizes of machines allow single-run welding of steels up to 70 mm thick or light alloys up to 120 mm thick and it is expected that these figures will be extended in the near future.

A fully-automatic portable gun has been designed for the welding of tubes to tube plates with a penetration of up to 8 mm in a single run for tube diameters between 12 mm and 32 mm with very high reproducibility.

Glow Discharge Electron Beam Welding

This relatively new and still developing process which offers great promise gives certain advantages over the plain electron beam welding process.

The principal features of the glow discharge electron beam gun are shown schematically in FIG. 5. It consists of a cathode formed by a block of aluminium having a spherically shaped depression, the radius of which is approximately equal to the cathode-to-target distance. Spaced approximately 10 mm from the cathode by a 'Tufnol' insulator is the anode which has a circular aperture. This anode confines the beam to the spherically-shaped region of the cathode and governs the accelerating field. The target or work piece is positioned at the centre of curvature of the cathode and is electrically connected to the anode which is normally at earth potential. The device is operated in a flow of inert gas such as nitrogen or helium in the pressure range of 25—100×10^{-4} torr. When a high negative potential is applied to the cathode, breakdown of the gas into an ionized plasma occurs through the anode aperture. The plasma formed between the anode and the target is separated from the cathode by a positive ion sheath across which a high potential is developed. Positive ions at the plasma sheath boundary are accelerated across the sheath to strike the cathode and produce secondary electrons. Since for every ion travelling towards a cathode approximately 10 secondary electrons are emitted an efficient electron beam source is obtained. The electric field at the cathode is such that electrons emitted at the cathode are formed into a conical beam focusing to a spot at the target. At potentials above 5 kV, scattering of the beam by the gas is negligible for

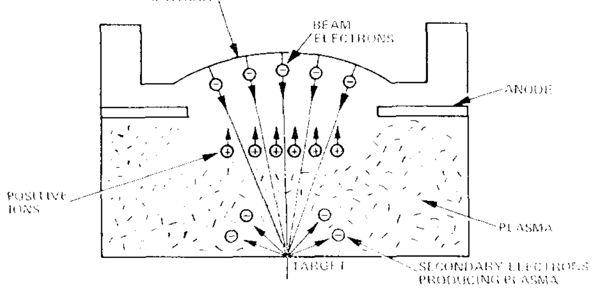

FIG. 5—GENERAL ARRANGEMENT OF THE GLOW DISCHARGE ELECTRON-BEAM SPOT-FOCUS GUN

distances up to 100 mm depending upon the partial vacuum used and approximately 75 per cent. of the power supplied to the device is actually dissipated at the target.

If the cathode is made in the shape of a linear trough having a circular cross section with the anode aperture in the form of a long slot, then a linear beam will result. Similarly, if the cathode is made in the form of a circular trough with an anode having an annular aperture, a ring focus may be formed on to a planar target. Another geometry which produces a ring focus on to a cylindrical target permits the butt welding of tubes.

Potentially this form of electron gun has advantages over conventional vacuum-operated beams, in that it requires only a relatively crude vacuum with the absence of hot cathodes and the need for special focussing equipment. Focus is not affected by voltage variation or ripple in the power supply. It is a single shot technique, the shaped beam being contoured to the work piece. There is no rotating component or movement of the beam and uniform heating conditions are produced minimizing distortion, and there is the built-in capability of pre- and post- heat treatment of the weld region. It has simple power supplies and control requirements and there is the freedom to choose a gas which suits the work piece metallurgy.

The glow discharge electron beam gun is particularly suited to operations such as the repetitive butt welding of tubular components and the sealing of cans or similar items where single-shot welds can be used to advantage.

Friction Welding

This form of welding is defined as a process which fuses metal together by frictional heat generated by rubbing two surfaces together under a compressive load.

There are two basic methods each producing the same end result but which have been developed separately. The first uses power made continuously available from a source of infinite duration and maintained for a pre-determined period. This process is often referred to as conventional frictional welding. The second process utilizes the discharge of kinetic energy from a flywheel to produce a friction weld between two components and is known as inertia welding.

In the continuous drive process the mechanical arrangement is virtually identical to the stored energy method. Two components are axially aligned and one of them is rotated at a predetermined speed. The stationary component is advanced into contact with the rotating arm and pressure is applied for a specific period whilst maintaining the drive to produce frictional heat. This raises the interfacial temperature to the point where the metal becomes sufficiently plastic for welding. The metal behind the interface is softened permitting the components to be forged together, creating a characteristic ‘lip’ or ‘collar’. When this fusion is achieved, the drive is switched off and the friction arrested whilst maintaining or increasing the axial pressure to consolidate the joint.

There are of course other arrangements possible for continuous-drive friction welding but in all schemes there are several main stages which can be identified in the welding cycle. A typical example of recorded parameters measured during friction welding of 19 mm diameter mild-steel bars using a 15 kW electric motor drive in an 11 tonne continuous-drive friction welding machine is shown in FIG. 6. The first stage is a rubbing or wearing action characterized by local seizure when surface contamination is broken down to expose clean metal. There are high transient demands for power as local hot-spot welds are being continuously formed and destroyed. At this stage no shortening of the parts occurs and only a small proportion of the total heat required is being generated at this time. A second stage takes over from the first as the surface becomes

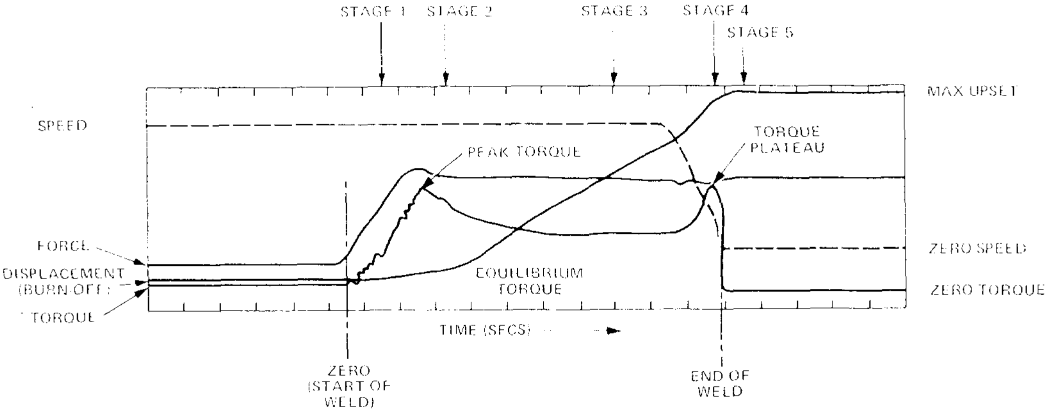

FIG. 6—TYPICAL RECORD OF FRICTION WELDING PARAMETERS

conditioned and is characterized by a smooth steady falling power demand during which the interface temperature rises to the operating value which is a little below the melting point of the base metal. As the surface reaches a plastic condition the heated metal begins to extrude from the interface and a small collar forms as equilibrium conditions are established. Shortening of one or both parts occurs as this deformation progresses and the state can be maintained for any finite period. A characteristic thermal profile and metallurgical condition in the material is now produced at the interface. This latter condition is particularly important when welding dissimilar metals. The ability to adjust this part of the welding cycle is an advantage when the length of the welded part has to be maintained within certain limits. These limits can be more closely controlled than is possible with many other welding processes. After a period the drive is disengaged and the spindle slows down with the pressure being maintained at its initial value or if necessary increased. The torque rises to a high value just before final arrest and at this instant radial and circumferential flow occurs at the interface. This stage is accompanied by limited diffusion and deformation, giving rise to hot working of the metal and some refinement of the microstructure at the interface. Mechanical working also takes place to a limited extent in the HAZ. At zero speed heat generation ceases and the consolidated weld cools under compressive load.

In most welding processes a large quantity of heat is lost as a result of the heating of a substantially larger volume of metal than is strictly required to make the weld. Friction welding processes are therefore quite efficient because the heat is generated only in the weld region and directly at the surface of the pieces being welded. In continuous-drive friction welding the power taken is directly dependent upon the torque since the speed remains virtually constant during most of the heating cycle. The specific power is influenced by the pressure to be applied to the parts but it is roughly constant for a given material. For example welds in mild steel require 3·5—4·6 kN/cm^2 of weld area at the start of the welding cycle at which stage, lasting about one second, the surfaces are relatively cool. Some 1·2—1·7 kN/cm^2 of weld area is needed to maintain equilibrium over a further period of about two seconds.

The versatility of the process is particularly attractive in cases where the cost of expensive dies cannot be justified for small batches. The fabrication of non-standard bolts in expensive materials is another example where the friction welding process can eliminate the cost of dies and offer economies in material. Friction welding of studs to metal frames or bases is quick and economical. For dissimilar metal welding continuous-drive friction can produce a direct bond between the two metals. Alternatively the process is capable of making short length transient pieces in materials which are otherwise difficult or impossible to weld by conventional processes. Joints between aluminium and stainless steel can be made for cryogenic and nuclear components and aluminium to titanium welds are possible for the production of electrical connections. The process is also well suited for making metal-to-ceramic joints and may be applied to join plastic materials. One example of friction welding being applied to a naval item is the process of securing noise-damping plugs into propeller blades by friction welding.

Diffusion Bonding

Although originally conceived as a process for specialized application to materials difficult to join, diffusion bonding is now becoming an attractive alternative process for joining normally easy-to-weld materials in complex geometries. Bonding is achieved by heating the prepared joint faces to a temperature across the interface which is well below the melting point of the base materials. This condition is held for a few moments whilst maintaining a moderate pressure on the components, typically from 5—15 N/mm^2. The operation is carried out in a vacuum to ensure joint integrity. The diagrammatic arrangement and the necessary thermal barrier system is shown in FIG. 7.

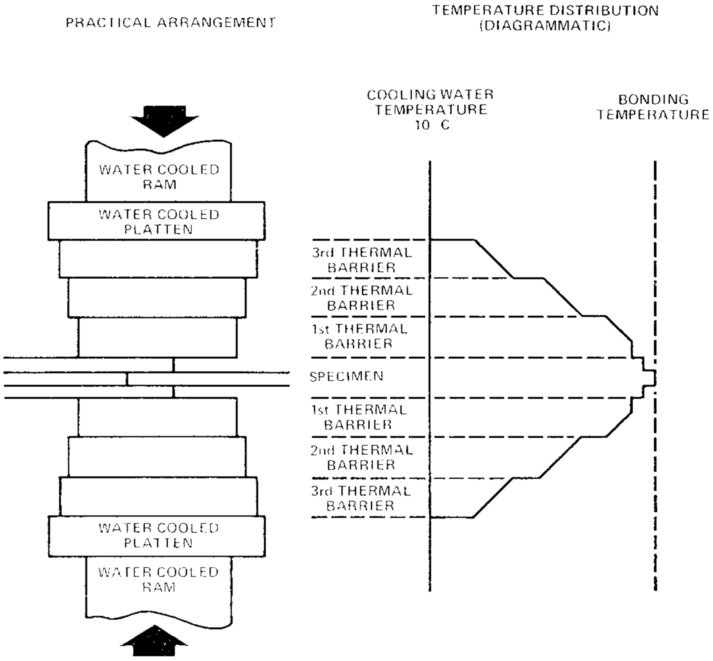

FIG. 7—DIFFUSION BONDING ARRANGEMENT AND THERMAL BARRIER SYSTEM

There are two forms of diffusion bonding—solid state and liquid phase. With the former, cleaned parts are heated and pressed together so that micro-deformation of surface asperities leads to the joint faces coming into very close contact with each other. If oxidation of these joint faces is prevented during heating, the oxide films initially present will usually disperse into the parent material and allow the surfaces to bond metallurgically. With liquid face diffusion bonding, an interface of a dissimilar material is placed in the joint which fuses at the bonding temperature to form a liquid film which spreads and wets the faying surfaces to effect a joint similar to that produced by brazing but of much higher strength. The dissimilar materials may themselves form the parts to be joined instead of forming the interlayer between the joint faces. In such cases the pressures used are much lower than for solid phase joints being typically only 0·5—1·5 N/mm^2 and the components may need to be rapidly cooled immediately in order to prevent the formation of brittle inter-metallic compounds.

The basic requirements for diffusion bonding are a joint configuration which readily allows pressure to be applied, good machined joint faces and carefully cleaned parts. For low-cost assemblies, joints are usually limited to flat, conical or cylindrical surfaces. Grinding, turning or milling to 0·2—0·4 micrometers has been found to be quite adequate for most industrial applications.

The process offers a realistic prospect of joining components without the problems normally associated with fusion welding. The absence of compositional, structural or physical property transitions at the joint also offer enhanced corrosion resistance and a reduction in the effects of HAZ on corrosion resistance.

With most material combinations, diffusion bonding is capable of giving joints with static strengths of 80 per cent. or more of the tensile strength of the parent material. Notable exceptions to this occur with certain aluminium alloys and tough pitch copper, bonded either to themselves or to other materials. Here the poor joint properties are associated with the difficulty of eliminating the tenacious oxide film from the surface of such alloys. Even so some excellent fatigue properties have been reported for lap joints involving some aluminium alloys. So far most of the development work on diffusion bonding in the United Kingdom has been carried out on an experimental unit having a nominal capacity of 6500 mm^2 joint area. The work is largely involved in a general study of process variables, joint properties and applications using a variety of materials. The use of intermediate materials to relieve the requirements on surface finish is also being studied and methods of inspection are under investigation since the difficulty of checking joint integrity is a factor which may limit the application of the process.

Diffusion bonding overcomes many of the shortcomings inherent in the presence of a fusion-welded joint. It avoids the production of an intervening cast structure and HAZ, providing instead a continuity of properties and behaviour almost impossible to achieve by other fusion-welding processes. It largely eliminates the human element and contains a built-in stress-relieving cycle for a fabricated assembly. It is also an attractive process for the fabrication of complex components which are currently obtained as monolithic castings or forgings. The difficulty inherent in the assembly of such components from smaller units by conventional welding techniques need no longer apply since joints can be produced by diffusion bonding in only a few minutes following simple surface grinding. Clearly the full potential of this process for such joints can only grow as equipment availability and capacity increases.

Laser Welding

In its most modern form, high-power CO_2 laser welding is an efficient and rapid method of producing butt joints in thin sheet materials.

Laser is a heat source produced by a beam of monochromatic light concentrated by fine focussing to give an energy density capable of melting metals. Due to plasma absorption however, there is a limitation on the thickness of materials that can be penetrated or welded. For a 2 kW laser, this limit is about 4 mm at a welding speed of around 12 cm/min giving a rather broad weld. On the other hand with a metal thickness of 2 mm, a 2 kW laser will produce a narrow weld at over 150 cm/min. The process should therefore be considered complementary to electron-beam welding which can handle much greater thicknesses although only at the expense of the provision of a high-vacuum environment.

Within its limitations on weld depth the laser produces narrow, high-strength, low-distortion welds at speeds exceeding many other processes working under similar open atmospheric conditions. However, for the future, until more powerful lasers are available the major attraction of the process is likely to be confined to the welding of relatively thin sections of special steels and alloys.

A main advantage of the laser process is that unlike diffusion bonding or electron-beam welding, it does not demand the use of a vacuum chamber. The joint preparation and assembly requirements are, however, no less critical and costly than for the two competing vacuum processes. For the immediate future, laser welding should find increasing application in the high-speed welding of relatively thin materials where it will compete directly with electron-beam welding at the bottom end of the thickness range, and especially for those applications where inconvenience is experienced in moving many small components in and out of a vacuum chamber. It is conceivable that high-power lasers will in time provide the ultimate facility for attaining a fast, deep welding capability under open atmospheric conditions.

Orbital Pipe Welding

The automatic welding of pipe and tube joints in any fixed position can be accomplished by the use of an automatic pipe-welding system. This system employs a modified gas-tungsten-arc process and involves altering the power source and its associated control circuitry so that the current delivered by the unit has the form of controlled pulsing. The technique combines controlled

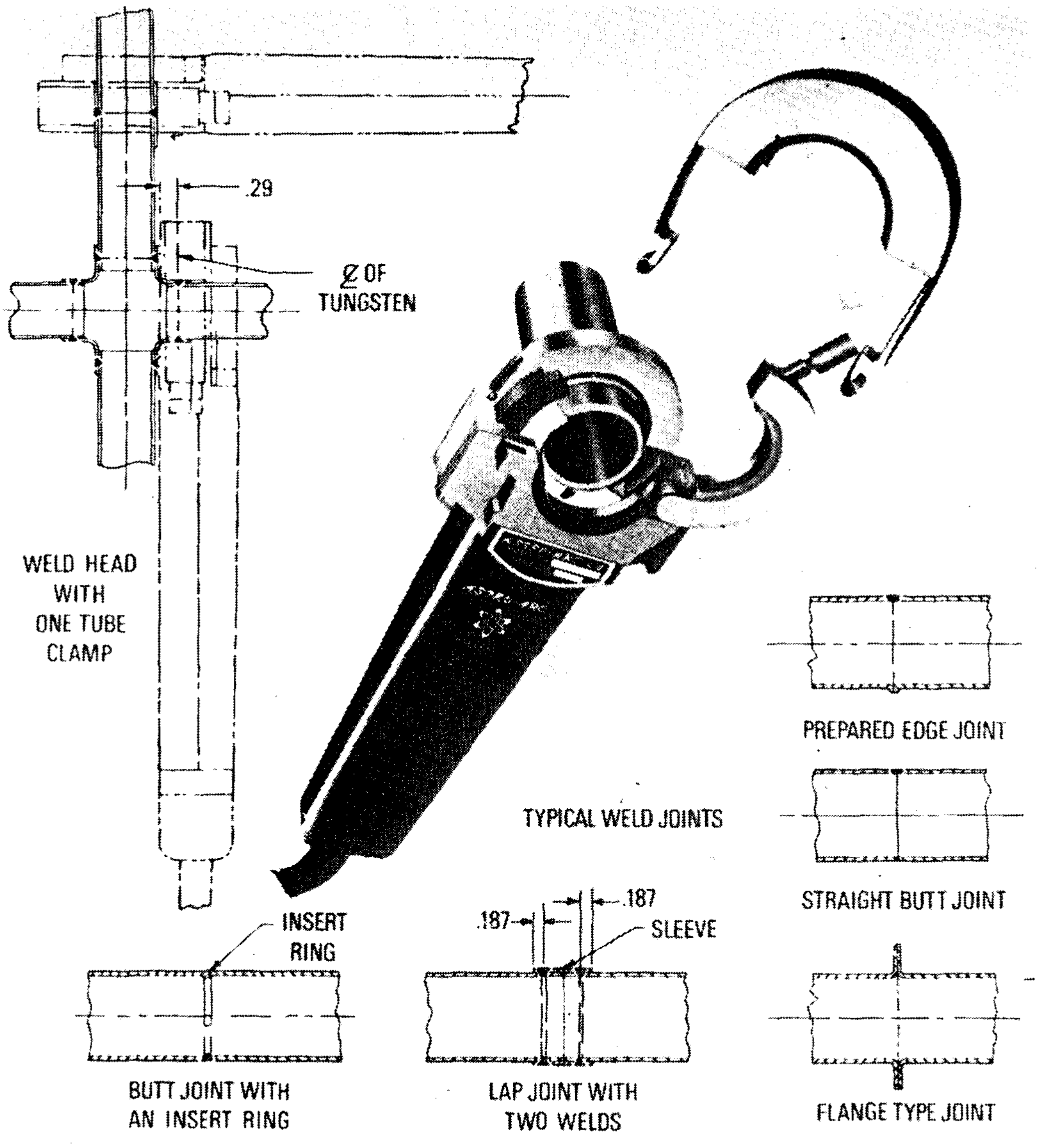

FIG. 8—ORBITAL WELDING HEAD FOR AUTOGENOUS TUNGSTEN-INERT-GAS WELDING

pulsing with other factors such as current step and slope control, speed control and cold wire feed control in order to accomplish fixed position pipe welding.

The pulsing used in the system is created by a periodic variation in the arc current amplitude at a pre-determined rate, generating a uni-directional wave shape with variable amplitude and frequency ranges. The primary benefit of the pulsating gas-tungsten-arc technique is the ability to control the weld pool fluidity and size so that the deposited bead is virtually independent of the welding position. There is no need for extensive programming of the welding parameters such as travel speed, average current, arc voltage and filler metal feed rate, these remaining essentially constant for a complete 360° revolution around the pipe. The only exceptions are that:

(*a*) The current must be reduced slightly at a point prior to the overlap on single-pass thin-walled square-butt joints.

(*b*) The current down slope is needed for terminating all welds in order to eliminate crater pits.

These features are incorporated in the automatic pipe-welding control system and may be adjusted over a wide range in order to satisfy the requirements imposed by the type of material, pipe diameter and wall thicknesses encountered.

The system can fuse consumable inserts automatically and deposit metal using automatic cold wire feed in any fixed position. It is also capable of automatically welding thin-walled piping using a square-butt edge preparation in a single pass. Successful application of the system has been accomplished with materials such

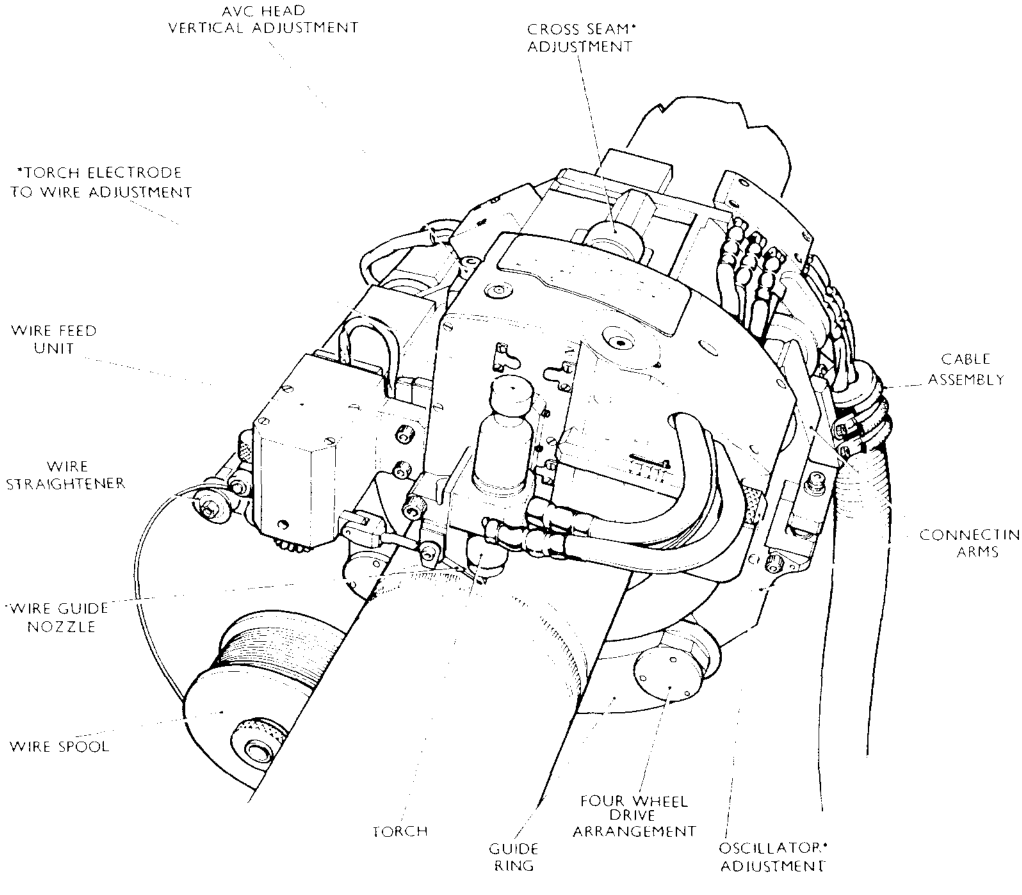

•ADJUSTMENT MAY BE PERFORMED
DURING ACTUAL WELDING OPERATION

FIG. 9—SKETCH OF ORBITAL WELDING HEAD FOR TUNGSTEN-INERT-GAS WELDING WITH FILLER WIRE FEED

as Inconel, Monel, cupro-nickel, stainless steel and carbon steel. Zircalloy and titanium are other more special materials successfully welded by this technique. In general the most difficult welding position for a circumferential joint is the horizontal fixed position. The problems stem from the fact that as the welder progresses around the joint the position of welding continually varies. Use of a manual process necessitates the welder exercising judgment and manual dexterity in order to vary certain parameters to compensate for the continuously changing position. Pulsating the arc gives a large degree of control over penetration and weld pool. This lends itself to the maintenance of the correct weld shape in all welding positions but application of this method only partly resolves the difficulties in situations where fixed-position welding is required. In many instances rolling is difficult, inconvenient and costly when many lengths and unusual configurations of pipe work are to be welded. Here the automatic pipe welding system becomes highly competitive because the cost of providing positioning and rolling equipment and holding fixtures are all avoided. The economics are enhanced by the fact that none of the metal deposited needs to be ground out and it compares favourably with other processes having higher deposition rates particularly when heat input is limited by metallurgical properties or where interpass grinding is required in order to achieve quality.

At present two types of automatic orbital welding equipment are being evaluated and developed. One produces an autogenous weld in thin-walled piping and the other is a wire feed process. The welds and power sources for automatically welding pipes in the range 12—175 mm OD have been installed in a shipyard in order that their potential in both pipe-shop and onboard welding can be assessed. These automatic welding systems will reduce the number of weld defects arising and eliminate the need for interpass grinding. Uniform weld shrinkage and therefore control of penetration and weld bead profile is possible and there is virtual elimination of distortion. Because of the repeatable quality and high integrity of welds produced, ultimately the NDT requirement will be lessened. All this is conducive to high-production rates and hence lower unit costs. FIGS. 8 and 9 show the autogenous and wire-feed weld heads.

Weld Cladding

An alternative to heavy cast material is the use of a composite structure consisting of a relatively cheap and strong load-bearing base metal clad with a thin corrosion- and erosion-resisting layer of usually a more expensive material. There are several methods of achieving this combination mostly dependent upon some form of fusion welding and the following outlines some of the processes presently being employed or developed and evaluated by the Ship Department.

Fusion Weld Overlay

Stringer Bead Technique

Early work involved the deposition of single-arc stringer-bead copper-based alloys on to steel using the metal-inert-gas (MIG) process under strong spray transfer conditions. This produces significant penetration of the substratum from which high iron dilution results. This phenomenon causes cracking in the clad layer and effects its corrosion resistance. Stresses developed in the impingement area during cooling increase the tendency to intergranular penetration of the copper into the steel substratum. This penetration can be altered by control of process variables but even under ideal conditions fairly high average dilution might result. MIG equipment incorporating pulsed arc is attractive as a means of reducing iron dilution levels but from an economic point of view low deposition rates preclude its use for overlaying large areas. With both straight and pulsed MIG the achievement of low dilution and adequate thickness of deposited layers requires at least two layers of weld cladding.

The introduction of a pure nickel buffer layer between the base metal and the cladding metal is another method of reducing iron dilution in the cupro-nickel layer and of copper penetration into the steel base.

Oscillating MIG

Overlaying by applying a weaving motion to the consumable electrode of the MIG process and at the same time feeding into the arc an auxiliary independent filler wire of the same composition has been shown to be capable of producing high deposition rates with reduced penetration of both the iron into the clad material and copper into the substrata. The Central Dockyard Laboratory Portsmouth developed a cladding system in which single layer deposits were put down using a pendulum oscillation and a weave amplitude of 40 mm. The slight change in arc length which occurs does not interfere with metal transfer conditions and a slight dwell at the extremities of the deposition promotes increased penetration.

The two-wire oscillating MIG process has been used in the deposition of 70/30 copper nickel on to a BS1501-221Gr.32 Alto steel substratum in the production of small facsimile headers now under test.

A basic advantage is the saving in cost of weld cladding a relatively cheap substratum with a thin layer of corrosion/erosion-resistant material against that of casting in the more expensive materials. The costly reclamation of castings by weld repair is eliminated by the use of this technique.

It is unfortunate that over recent months the high cost of the labour content and NDT requirements has made the process of cladding by fusion overlaying less attractive and the following two approaches to cladding are now coming into favour.

Skin (Stitch) Cladding

The technique employed for lining steel vessels such as submarine muffler tanks and sea tubes has been the result of the development of automatic plug welding as a means of securing the linings to the substratum. The technique involves the MIG process modified to give a timed welding cycle involving arcing, controlled penetration of the clad sheet and steel, and a welding head retraction whilst continuously feeding filler wire in order to eliminate piping in the plug weld at cut off.

The process involves an initial 'rolling in' of the cladding material which has been seam-welded and roughly formed. This is then followed by plug welding the cladding to the substratum. The ends are sealed in the conventional manner of welding copper nickel to steel.

Iron dilution cracking has not been evident in any of the samples examined. Evidence of the unimpaired corrosion resistance of cupro-nickel plug welds has been obtained from sea tubes constructed using this technique which have now been in service in some *Leander* Class frigates for several years.

Advantages of this process include considerable saving in cost and time over the conventional fusion-welding processes.

Explosive Cladding

In this process the surfaces to be bonded are carefully cleaned and prepared and the cladding material is then placed at a predetermined distance above the thicker backing metal. The air gap between the two metals is extremely critical and correct placing is essential to achieve a satisfactory bond. A uniform layer of a TNT-based explosive is then spread over the cladding plate and detonated. The explosion travels radially from the point of detonation and progressively bonds the cladding plate to the backing metal forming a metallic 'jet' at the point of impact. The effect of this 'jet' is to remove the contaminated surface of both metals and effect a good metallurgical bond. The explosion gives a wavy interface formed under a very high instantaneous pressure of several million N/m^2 producing an exceptionally strong inter-molecular bond. Clad plates formed in this way can for fabrication purposes be treated as solid material since they can be welded, machined, drilled and formed without any loss of bonding. In fabricated form they suffer no deterioration from high pressure, temperature or vacuum, thermal cycling or arduous heat-transfer duties. Explosive cladding supplements the other processes and in many instances can be used to advantage over these processes.

Concurrently with this work trials and evaluation are in hand to study the process of welding pipe joints by explosive means.

The advantages of explosive cladding include the cladding of difficult material combinations such as aluminium to steel and copper to aluminium, the process creating true metallurgical bonds between these materials. There is a reduction in cost of production particularly in time saving when compared with more conventional cladding processes. No problems exist regarding iron dilution from the substratum or copper penetration into the substratum from the clad material.

Thermal Spray Deposition Processes

There are four basic processes for thermal spray deposition of coatings, the first of which has two variants:

(*a*) Combustion processes:
    (*i*) Gas-flame wire gun.
    (*ii*) Gas-powder gun.
(*b*) Electric arc wire gun.
(*c*) Plasma gun.
(*d*) Detonation gun.

Gas Flame Wire Gun

This comprises a hand-held spraying head of pistol form together with a wire feed device, a supply of oxygen, and a fuel gas and dry compressed air. The gas and oxygen are mixed in certain proportions within the gun and the wire is fed into the flame, fused there and atomized and ejected by compressed air on to the object being sprayed. Any metal which can be made into wire can be used in this gun. It is fed at the correct rate by feed rollers within the gun driven either by a small compressed air turbine or by an electrical drive.

Various types of fuel gas can be used although the preferred one is acetylene. With this fuel the whole assembly can be quite compact requiring only a cylinder of oxygen and one of acetylene together with a suitable compressed-air supply having a pressure of 450—520 kN/m^2.

Guns of this type can be hand held and for many purposes, especially in dealing with small areas or on repair work, this is the simplest way. If, however, a large surface has to be sprayed some form of mechanical traverse of the gun is preferable.

Some jobs can be sprayed in a single traverse depending upon the coating thickness required. A good rule is to cover a surface of 15—30 m^2/min and to apply about 0·1 mm/pass making as many passes as necessary to build up the required thickness. This is, however, only a general guide and not an inflexible rule.

Gas Powder Gun

The process is similar to the gas-flame wire gun process and is used for the deposition of powdered metal alloys, cermets and ceramics. Instead of a wire feed, the gun is fitted with a hopper and lever valve by which means powder is fed to the flame and into a stream of air. The fused powder is deposited on to the base material using an air pressure normally between 450 and 520 kN/m^2 which again must be clean and dry. Powder guns may also be hand held or automated by use of a lathe saddle.

Electric Arc Wire Gun

This unit is somewhat similar in appearance to the gas gun and is also very portable. Its heat source is an electric arc struck between two wires fed into the gun. The wires enter through insulating tubes from feed tubes and are gripped and driven forward by feed rolls to approach the arc point at a slight angle each side of the centre line of the gun. The arc produces a small but intensely hot region in which both the wires melt. The molten metal is then ejected from the gun nozzle by a compressed-air jet and deposited on to the work object.

Arc guns have the advantage that no gas cylinders are needed, only an air supply and an electrical supply. There is an electrical control cabinet but this is a fairly small box and the whole apparatus is highly portable.

Metal deposition rates vary according to circumstances and are dependent upon the type of metal being sprayed. A good guide when using steel as a sprayed metal is to assume a metal deposit rate of about 4·5 kg/100 amps. of current.

Plasma Gun

The plasma gun is a more complicated device than any of those so far described and is more expensive to buy and operate. It is usually used for spraying the more exotic materials—oxides, carbides, nitrides and borides—where these are used as hard facing or thermal barrier coatings.

The material to be sprayed is supplied in the form of a powder and passed into an area of intense heat generated by a plasma. The plasma is produced by a gas at high pressure passing through an electric arc. Here the gas molecules are split into a large number of ionized particles having a high energy level. The powder suspended in a carrier gas is fed into this plasma stream, fused and deposited on to the work piece.

Temperatures of up to 15 000°C are achieved and particle velocities can be up to 610 m/s. These figures compare with about 2500°C and 90 m/s by conventional metal spraying processes.

The plasma gun was created to meet the special needs of high melting-point materials and it supplements the other methods which are usually quite adequate for the vast range of applications.

Detonation Gun

The detonation gun is an advanced device for applying hard surface coatings. To coat by this method, precisely measured quantities of oxygen, acetylene and suspended particles of powdered coating material are pressure fed into the chamber of a specially constructed gun. A timed spark-plug ignites the mixture and creates a detonation which hurls the coating particles, now heated to a plastic state, out of the gun barrel at a speed of 750 m/s.

The parts to be coated are held at a prescribed distance, usually 5—10 cm, from the end of the barrel. At this distance the coating particles are impacted on to the surface of the part. The actual flame, at 3400°C in the gun, never touches the part which is maintained below 200°C by auxiliary cooling streams. On impact the coating particle flattens out to produce a coating that is laminate in structure and this accounts in the main for the high bond strength and low porosity of these coatings.

The controlled detonations occur at rates of up to eight times per second and successive detonations build up the coating to the desired thickness. The high level of sound produced by the gun (around 150dB) is contained by housing the entire operation in a sound-insulated concrete cubicle. Once it is set up the actual coating operation is completely automatic and is operated from a remotely-controlled console outside the cubicle.

There are many advantages offered by the processes all of which show a reduction in prime costs over other means of production. Where corrosion resistance is the objective a cheap base material may be coated with a corrosion resistant skin. Similarly a component can be made wear resistant by depositing a suitable coating on to a metal which has been selected primarily for its strength properties. Most metals and many ceramics and cermets can be sprayed as surface coatings on to worn parts, often producing a more wear-resistant surface on the reclaimed part than was initially present. Shortages and costs of materials make such reclamation very attractive from the economic aspect. These spray reclamation processes with the exception of plasma and detonation-gun methods, can usually be carried out on site and often *in situ* reducing down time and handling costs by a considerable degree.

Acknowledgement

The work and support of the staff of Sections 252 and 251 of the Ship Department in the field of welding and thermal spraying development and evaluation is gratefully acknowledged.