# Propulsive Devices for Improved Propulsive Efficiency

**E. J. Glover, BSc, PhD, CEng, FRINA**
University of Newcastle upon Tyne

## SYNOPSIS

*The recent increased emphasis on fuel economy has lead to proposals for 'unconventional propulsive devices', with the objective of increasing propulsive efficiency. For some of these devices the benefits stem mainly from an increase in propeller efficiency and for some they result from improvements in hull/propeller interaction. This paper reviews these devices and describes the nature of their action and the sources of the gains claimed for them. In order to put these gains into context, the paper starts with a description of the nature and magnitude of the hydrodynamic energy losses, which influence the propulsive efficiency, and of the procedures used to optimise the conventional propeller.*

## INTRODUCTION

The conventional, solid, fixed-pitch propeller provides a cheap and effective means of propulsion which can normally be relied on to achieve its design performance. In recent years the increased emphasis placed on fuel economy has resulted in the proposal and, in some cases, the application of what might be termed 'unconventional propulsive devices' with the objective of increasing propulsive efficiency. For some of these devices the benefits stem mainly from an increase in propeller efficiency and for some they result from improvements in hull/propeller interaction.

The purpose of the present paper is to review these devices and to describe the nature of their action and the sources of the gains claimed for them. In order to put these gains into context, the paper starts with a description of the nature and magnitude of the hydrodynamic energy losses, which influence the propulsive efficiency, and of the current procedures used to optimise the conventional propeller.

Dr Glover is a Senior Lecturer in Naval Architecture and Shipbuilding and Director of the Emerson Cavitation Tunnel of the University of Newcastle upon Tyne. His involvement in propeller design and research spans a period of 30 years since graduation in 1957. During this period he has been responsible for the development of theories and design methods for a wide range of propulsive devices and has had some influence on the design processes used by the major UK propeller manufacturers and other organisations. He is a member of the Propulsor Committee of the International Towing Tank Conference and is also actively employed internationally as a consultant on propeller design and performance.

## PROPULSIVE EFFICIENCY

The propulsive efficiency, $\eta_D$, is measured as the ratio of the effective power, $P_E$ = resistance times ship speed, to the power delivered at the propeller, $P_D$, at that speed, ie

$$\eta_D = P_E/P_D$$

By convention the propulsive efficiency is normally considered in two parts. The first part, the open water propeller efficiency, $\eta_o$, is a measure of the thrust-producing capability of the propeller when acting on its own without the presence of the hull and is given by

$$\eta_o = P_T/P_D$$

where $P_T$ is the thrust power.

The second part accounts for the interaction between the hull and propeller flows and is represented by the hull efficiency, $\eta_H$, and the relative rotative efficiency, $\eta_R$.

These two parts of the propulsive efficiency will now be considered in more detail.

### Propeller efficiency

The energy losses associated with the action of a propeller are due to increases in the kinetic energy of the water passing through the propeller and the drag losses due to the passage of the blades through the water.

Drag losses are a function of the blade surface area and surface finish and, to a lesser extent, the blade thickness and the shapes of the blade section profiles. The minimum blade surface area is constrained by the need to minimise the risk of cavitation, blade thickness is governed by strength considerations, and profile shapes must satisfy both cavitation and strength requirements. The propeller designer therefore has little scope for controlling the drag losses at the design stage and emphasis is placed on the provision and maintenance of a satisfactory surface finish. These topics are discussed in another paper being presented to this Symposium.

The kinetic energy loss has two components, axial and rotational. The development of thrust results from axial acceleration of the water and causes an increase in the axial kinetic energy, while the shaft torque is transferred to the water causing induced rotational velocities and a rotational kinetic energy loss. Taken together, these two losses result in the ideal efficiency of the propeller.

In an ideal fluid, the ideal efficiency will approach 100% as the propeller diameter approaches infinity since, as the mass flow increases, the increase in speed for a required increase in momentum becomes smaller. In a real fluid with drag losses there will be an optimum, finite diameter at which the real efficiency will have a maximum value for a given thrust (or torque), speed of advance and rate of rotation. Also, for a given thrust (or power) and advance speed, the efficiency increases as the rate of rotation decreases and the diameter increases. There is an obvious advantage in using the largest possible diameter, within the limitations of hull/propeller clearances, and the corresponding optimum rate of rotation.

The propeller efficiency varies inversely with the thrust loading which can be represented by

$$C_T = \frac{T}{\frac{1}{2}\rho \frac{\pi D^2}{4} V_a^2}$$

where $T$ is the thrust, $D$ is the diameter, $V_a$ is the mean advance speed and $\rho$ is the mass density of water.

Values of propeller efficiency and its components calculated for representative vessels covering a wide range of $C_T$ are given in Table I, where the results clearly demonstrate the increase in the axial energy loss with increasing thrust loading and the consequent decrease in propeller efficiency. The rotational energy loss is small in comparison with the axial but has a significant effect on the propeller efficiency. For instance, the complete removal of the rotational energy loss at $C_T$ = 5.98 would result in a 16.5% increase in propeller efficiency.

## Hull efficiency and relative rotative efficiency

These two components of the propulsive efficiency account for the interaction between the propeller and the hull.

The hull efficiency comprises two components. First, the wake gain due to the fact that the propeller advances relative to the water at a mean speed, $V_a$, which is less than the ship speed, $V_s$. The advance speed is related to the ship speed by the wake fraction, $w$, such that

$$V_a = V_s(1 - w)$$

The second component is the thrust deduction which accounts for the fact that the thrust, $T$, required to achieve the speed $V_s$ is greater than the towed resistance, $R$, at that speed and is quantified by the thrust deduction fraction, $t$, where

$$t = (T - R)/T$$

The relative rotative efficiency accounts for the fact that the propeller will generally be more efficient in a non-uniform flow field, such as that which exists behind the ship, than it will be in a uniform stream of the same mean speed. For the same thrust, the power required behind the ship, $P_{DB}$, is less than the power required in open water, $P_{DO}$, and the relative rotative efficiency is given by

$$\eta_R = P_{DO}/P_{DB}$$

An expression for the propulsive efficiency can then be derived as follows:

$$\eta_D = \frac{P_E}{P_{DB}} = \frac{P_E}{P_T}\,\frac{P_T}{P_{DO}}\,\frac{P_{DO}}{P_{DB}}$$

$$= \frac{R\,V_s}{T\,V_a}\,\eta_o\,\eta_R$$

$$= \frac{1 - t}{1 - w}\,\eta_o\,\eta_R$$

Finally,

$$\eta_D = \eta_H\eta_o\eta_R$$

where $\eta_H = (1 - t)/(1 - w)$ is the hull efficiency.

## Optimisation of propulsive efficiency

Clearly the attainment of maximum propulsive efficiency depends on the optimisation of the propeller and its interaction with the hull and this could be effected mathematically if it were possible to develop a satisfactory model of the combined hull and propeller flows. Considerable advances have been made in this direction in recent years but the major obstacle remains the problem of developing an adequate representation of the hull boundary layer flow.

**Table I: Values of propeller efficiency and its components for a range of $C_T$ values**

| $C_T$ | *Axial loss (%)* | *Rotational loss (%)* | *Drag loss (%)* | *Total efficiency* |
|---|---|---|---|---|
| 0.56 | 15.5 | 6.7 | 16.4 | 61.4 |
| 1.43 | 22.7 | 5.6 | 13.9 | 57.8 |
| 3.44 | 32.1 | 4.8 | 14.3 | 48.8 |
| 5.98 | 40.6 | 6.9 | 10.7 | 41.8 |

At the moment, the achievement of maximum propulsive efficiency depends mainly on the optimisation of the propeller. The remainder of this paper will be concerned with possible means of increasing propeller efficiency, although it will be seen that the effectiveness of some of the unconventional propulsive devices considered depends to a certain extent on favourable changes in the propeller/hull interaction.

# OPTIMISATION OF THE CONVENTIONAL PROPELLER

Before moving on to consider unconventional propulsors as a means of improving propeller efficiency, it is, perhaps, desirable to review the methods used to optimise the performance of the conventional propeller.

In the early design stages, the required engine power and the optimum propeller rate of rotation can be estimated as functions of ship speed, thrust and maximum permissible propeller diameter. When, on the basis of these calculations, the final engine power and propeller speed have been fixed, further calculations are made to determine the ship speed and propeller diameter and pitch corresponding to the given engine conditions. These calculations can be carried out perfectly adequately using standard series propeller model data and will result in an acceptable estimate of the optimum propeller diameter.

The minimum blade surface area required to avoid excessive cavitation can be calculated using a simple empirical criterion, such as Burrill's cavitation diagram, and the maximum blade thickness at the root can be determined by means of a simple beam theory stress calculation. The detailed form of the blade can then be derived from these values by adopting a standard blade outline, radial thickness distribution and blade section shapes.

Application of a design procedure of this type will result in what might be termed a basic propeller which would perform adequately behind the ship, but it is now common practice to introduce a further level of optimisation to produce a wake-adapted propeller.

The purpose of the wake-adaptation procedure is to determine the final blade section shapes and pitches to satisfy the given design conditions when working in the radially varying wake field behind the ship. The procedure is based on the concepts of the vortex or circulation theory and the blades are replaced, initially, by lifting lines (having no width and thickness) along which the bound circulation is distributed in a continuous manner from the hub to the tip. The solution of the lifting line model includes the introduction of an optimisation criterion to give minimum energy loss in the slipstream and results in the definition of the circulation and resultant flow direction at the radial positions of the blade sections. From these data the final blade section shapes and pitches can be determined with appropriate corrections for finite blade width and thickness.

As was explained above, it is not possible at the moment to derive an exact criterion for the optimisation of a wake-adapted propeller but a number of approximate criteria exist which will result in generally similar solutions to the lifting line model.

Another problem which arises from our present inability to predict accurately the hull flow is the definition of the radial wake pattern in which the propeller is assumed to work. A wake survey carried out behind a towed hull model defines the nominal wake of the model hull and two adjustments are needed to derive the effective wake of the ship hull. The first adjustment must account for the scaling of the nominal wake in moving from model to ship and the second for the propeller induction on the hull flow. Approximate methods exist for making these adjustments but the extent to which the derived radial wake variation is representative of the flow behind the ship remains unclear.

Despite these shortcomings, the introduction of theoretical concepts into the propeller design procedure has led to acceptably high levels of optimisation.

## UNCONVENTIONAL PROPULSIVE DEVICES

The term 'unconventional propulsive devices' is used here to cover the variants of the simple fixed-pitch or controllable-pitch propeller which have been developed with the object of improving the propulsive efficiency. In most cases the claimed benefits have a sound physical basis and should be attainable within the limits of practical constraints but some claims have a less sound basis and can be disputed.

Most of the devices are intended to increase propeller efficiency but it will be seen that some depend to a certain extent on favourable changes in propeller/hull interaction. The nature and potential of each device will now be discussed but not necessarily in order of merit.

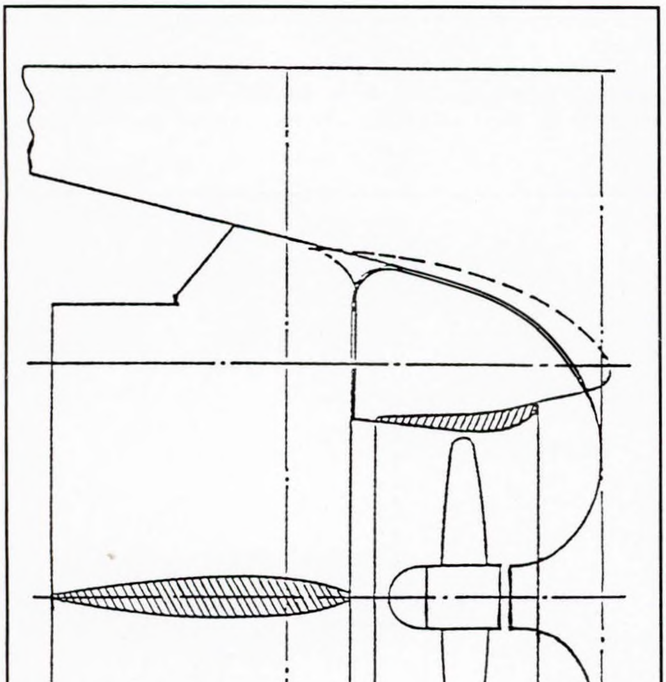

FIG. 1: Typical ducted propeller arrangement [from Ref. (1)]

### Ducted propellers

If the propeller thrust loading is sufficiently high, significant gains in performance can be achieved by enclosing the propeller in an annular duct (or nozzle) (Fig. 1), the shape of which is such that it accelerates the water towards the propeller, increases its relative speed of advance and transfers thrust from the propeller to the duct. Then, for the same power input, the nett thrust of the propeller and duct will be greater than that of the equivalent open propeller.

Up to a certain point, the efficiency of the ducted propeller increases with the proportion of the total thrust which is developed by the duct. The duct thrust depends on the contraction of the flow between the duct entrance and the propeller plane and, to a lesser extent, diffusion of the flow between the propeller and the duct exit. For a given application the upper limit of efficiency will be reached when attempts to increase the duct thrust by, say, increased diffusion are unsuccessful due to flow separation on the duct surface. Owing to the off-loading of the ducted propeller, its optimum diameter is less than that of the equivalent open propeller and in consequence the extreme diameter of the ducted propeller system will be similar to that of the open propeller.

As stated above, the use of a duct is beneficial under conditions of high thrust loading and most applications have been, and still are, to vessels which spend a large part of their working lives in a low-speed, high-thrust, towing condition, viz. tugs and trawlers. With a ducted propeller, bollard pull can be as much as 50% or more higher than would be achieved with an open propeller absorbing the same power. The effectiveness of the duct decreases with forward speed but at low towing speeds the gain derived from the use of a duct is still substantial. However, at high speed, in the full ahead, free-running condition, the nett force on the duct may be a drag force thus reducing the propulsive efficiency. As far as tugs are concerned this may not be of great importance in a market where bollard pull is the major requirement but for trawlers the economics of ducted propellers versus open propellers may need more consideration.

The use of small ducted propellers and thrusters is now so widespread, particularly in the offshore field, that their description as unconventional may seem inappropriate but they merit inclusion here because of their potential as energy-saving propulsors for large ocean-going vessels operating in the normal ahead condition.

For the propellers shown in Table I, the changes in propeller efficiency due to the application of a duct could range from about -17% at $C_T = 0.56$ to about +14% at $C_T = 5.98$. The extent to which these increases will be reflected by increases in propulsive efficiency will depend on the interaction between the ducted propeller and the hull, which will be different from the interaction with the open propeller. Model tests suggested that not all of the gain in propeller efficiency would necessarily appear as gains in propulsive efficiency but, nevertheless, it is possible to say that, for $C_T > 3$, gains in propulsive efficiency of the order of 5% to 12% can be attained by fitting a ducted propeller.

By the mid 1960s the thrust loading on tanker and bulk carrier propellers had reached the point at which the use of ducted propellers became attractive. This gave rise to the setting up in most shipbuilding countries of extensive research and development programmes concerning the design and application of ducted propellers. Some idea of the breadth and international nature of this work can be seen in the papers presented to the RINA Symposium on Ducted Propellers in May 1973,[1] by which time a large number of bulk carriers and tankers with ducted propellers were coming in to service or were on order, particularly in Japan.

For the typical 250 000 dwt tanker of that time gains in propulsive efficiency of the order of 10% were achieved but unexpected and, in some cases, severe problems arose because of cavitation. Unsteady cavitation caused by the severe fluctuations in the wake pattern is a well known and continuing problem. It had been thought that the duct would have the effect of smoothing the flow while accelerating it towards the propeller. This may have been partially achieved but in many cases it was not sufficiently complete and the typical 'flash' of back cavitation occurred as the blades moved throughout the upper part of the aperture. With an open propeller this cavitation may cause blade erosion and hull vibration but in the ducted propeller the cavities were swept on to the duct surface where their implosion caused rapid erosion and eventual cracking of the duct plating together with impact noise and vibration.

Some success in overcoming these problems was achieved by injecting air on to the duct surface upstream of the propeller plane, some of the air acting as a cushion between the duct surface and the imploding cavities and some being entrained in the cavities with a stabilising effect. This work and the application of 'conventional' ducted propellers to large ships came to a rather abrupt halt with the cancellation of orders for large tankers following the onset of the energy crisis in the mid 1970s.

To summarise, it can be said that the concept of the ducted propeller is based on sound hydrodynamic principles and the predicted performance is attainable in practice. Ducted propellers are more applicable to slow, full ships for which gains in propulsive efficiency of from 5% to 12%, in comparison with the conventional open propeller, can be expected. However, the problems mentioned above still remain to be overcome and in the meantime other devices offering similar gains in performance have been developed.

## Integrated duct system

One of the results of the massive increase in fuel costs was that, whereas before a gain of at least 10% in propulsive efficiency was considered necessary to demonstrate the viability of unconventional propulsors, gains of 5% or even less became attractive and the saving in the fuel bill made it possible to recover any extra initial cost in a reasonably short time.

One of the first new devices to be proposed was the Mitsui integrated duct system (MIDS) developed initially by Mitsui Shipbuilding and Engineering Co. Ltd and Exxon for retrofitting to tankers in the latter company's fleet.[2]

The device consists of a non-axisymmetric duct placed forward of the propeller such that the blade tips coincide with the trailing edge of the duct (Fig. 2). Some of the beneficial effects of the duct are then obtained without the problems of erosion etc. The object of the non-axisymmetric duct is to improve the flow to the propeller by adapting the duct profile shape to the non-uniform flow from the hull.

In a conventional ducted propeller system the propeller is normally placed at the centre of the duct length and it is easy to demonstrate that as the propeller is moved towards the trailing edge of the duct, the effectiveness of the duct is reduced. The efficiency of the MIDS ducted propeller system is therefore less than that of a conventional ducted propeller. It appears that a large part of the gain achieved with MIDS stems from interaction between the duct flow and the hull flow, this interaction having the effect of reducing the viscous resistance of the hull.

It follows that MIDS will give the greatest benefit when applied to ships whose viscous resistance is adversely affected by the flow at the stern and hence its rather widespread application to ships with slow, full forms for which gains of the order of 5-10% are quoted.

The design of the system, in particular the shape of the non-axisymmetrical duct, appears to be largely based on the results of model experiments including resistance, self-propulsion, flow visualisation and cavitation tests.

## Propellers with end plates

### *The tip vortex free propeller*

The so-called tip vortex free (TVF) propeller (Fig. 3) was developed by Astilleros Espanoles SA (AESA) and, in order to understand its nature and effectiveness, it is necessary to take a closer look at the theory of propeller action.

In the section on propeller efficiency it was stated that the energy losses in the slipstream result from the acceleration of the water necessary to give the required changes in momentum. The vortex theory of the wing and propeller blade provides an alternative and more detailed explanation of the induced velocities and energy losses in the slipstream and the results derived from the theory are equivalent to those from the momentum theory. In fact the wake-adaptation procedures previously mentioned are mostly based on solutions of this vortex theory of propeller action.

In this theory the lift force experienced by the blade sections is shown to be due to the setting up of circulatory flow around the sections. If this circulation varies in magnitude at the different sections between the blade root and tip, then, because of this variation, 'free vortex lines' are shed from points along the trailing edge of the blade and it is these vortices which induce the velocities in the slipstream.

The energy loss and the optimum efficiency of the propeller are thus functions of the form and strength of the free vortex system and the optimisation criteria used in the wake-adaptation procedures lead to a continuous distribution of circulation along the span of the blade varying from zero at the root to a maximum at about mid-span to zero at the tip.

In an ideal fluid the energy losses can be made zero and the ideal efficiency 100%, if the span-wise distribution of circulation is uniform and if the wing or blade is of infinite length or is of finite length and terminates at solid boundaries of infinite extent. The former of these two conditions can be deduced from the momentum theory since as the mass flow increases the acceleration necessary to give a required change in momentum decreases and with it the energy loss. Hence, for an infinite diameter, the energy losses would be zero.

Neither condition for zero energy loss can, of course, be satisfied in practice but it is possible to show that large increases in ideal efficiency can be achieved by attaching to

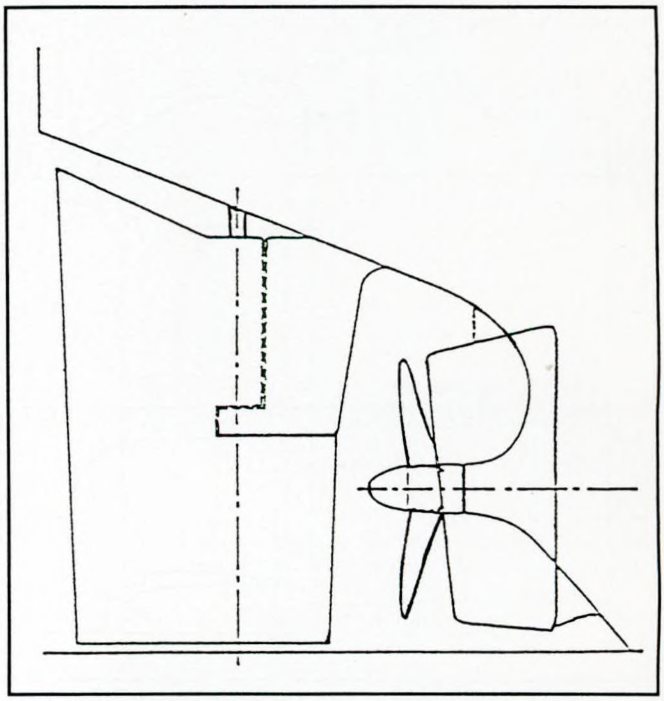

FIG. 2: Mitsui integrated duct system [from Ref. (2)]

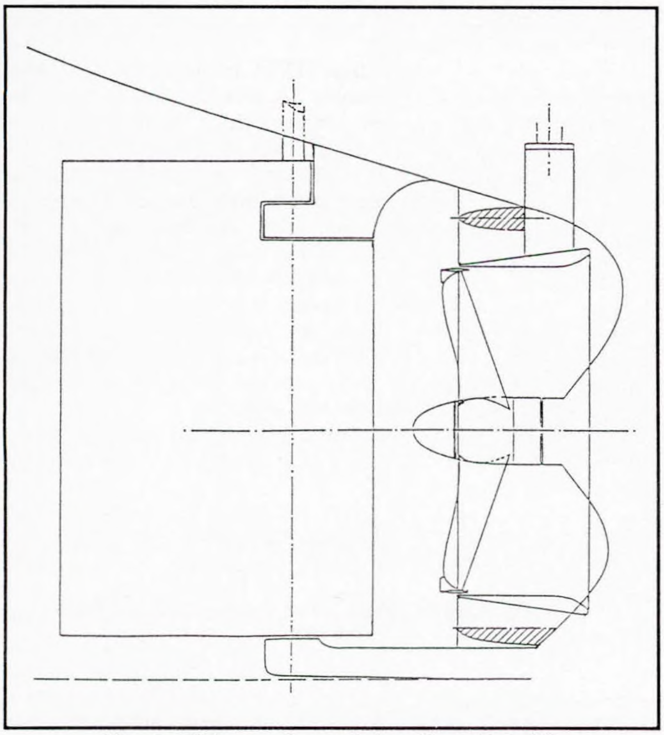

Fig. 3: TVF propeller and duct [from Ref. (4)]

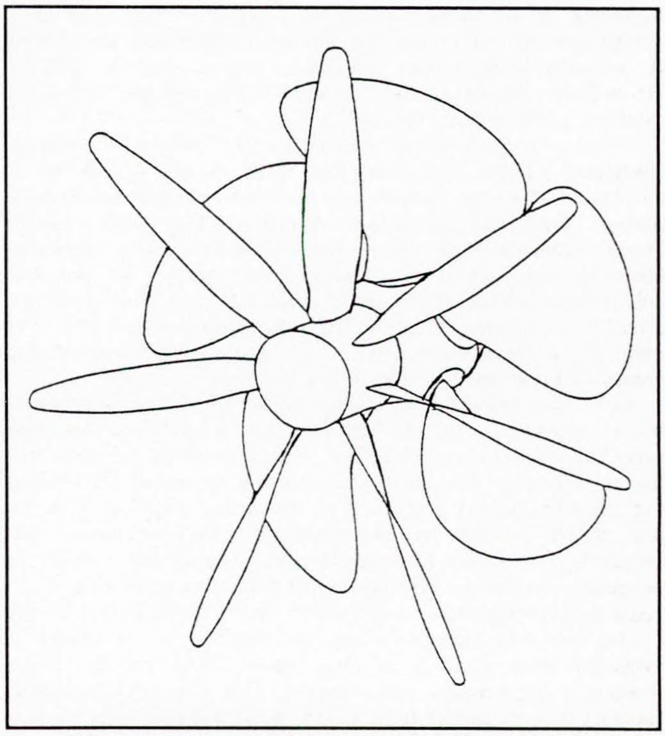

FIG. 4: Propeller and Grim vane wheel [from Ref. (8)]

the blade tips a continuous ring of short axial extent, in which case the optimum distribution of circulation along the span will have a finite value at the tip. The 'ring propeller' can then be likened to a ducted propeller with the duct attached to and rotating with the propeller. It is the rotation of the duct or ring which is the shortcoming of the ring propeller since, in the real, viscous fluid, the drag of the ring reduces the real efficiency to a value well below that of the conventional open propeller.

From their publications,[3] it would appear that the ring propeller was the starting point for AESA's development of the TVF propeller, their philosophy appearing to be that the efficiency could be improved by cutting away the ring between the blades leaving small end plates attached to the blade tips. This, of course, would reduce the drag loss, but unfortunately the theory of the ring propeller shows that the ideal efficiency decreases rapidly as the circumferential extent of the ring is reduced and approaches the efficiency of the open propeller.

Reducing the ring to end plates in this manner means that, in fact, any reduction in energy which is achieved results not from the solid boundary effect but from a virtual lengthening of the span of the blade. The circulation around the blade tip is continued around these sections of the end plate, going to zero at a slower rate with the strength of the free vortices being reduced. In this way some of the advantage of increased diameter is gained without the disadvantages. However, it is incorrect to call the device a 'tip vortex free' propeller since vortices will still be shed along the length of the blade and end plate.

The end plate on the propeller blade is analogous to the 'winglet' which is gaining some use on aircraft wings. The object of the winglet is to reduce the induced drag for a given lift without the increased bending moment associated with increased span. The reduction in induced drag is partly offset by an increase in frictional drag but early wind tunnel tests suggested gains in lift:drag ratio of about 9%. In practice the effect seems to be smaller, for instance a proposed Boeing 747 development would have a reduction in fuel burn of about 1% if winglets were used.

At an intermediate stage in the development of the device, AESA decided that, 'to improve the flow over the end plates', it was necessary to place a duct forward of the propeller. The device then becomes similar to the Mitsui integrated duct system and it is reasonable to suggest that a large part of the claimed improvement in propulsive efficiency results from the beneficial action of the duct.

TVF was the subject of a considerable publicity campaign. Initially it was claimed that the propulsive efficiency would be increased by up to 50% but this was later toned down to a maximum of about 18%. These claims and their justification were based initially on the application of doubtful scaling procedures to model results[4] and, later, some equally doubtful analysis of trial and service results.[5]

### *HEFA propeller*

The originator of the TVF concept has recently[6] put forward the proposition that the end plates will be effective, without a duct forward of the propeller, if they are properly aligned to the contracting flow at the blade tips. The propeller with the end plates designed in this manner has been given the name 'high efficiency flow adapted propeller' but no measure of the efficiency gain has been given and no experimental verification has been published.

### *Other developments*

More recently, Andersen and Andersen[7] have attempted to produce a rational theory for the prediction of the performance of propellers with end plates or tip fins, as they call them. In this theory the blade is represented by a lifting line with a large amount of rake towards the tip. Calculations made using the theory show that the rake should be towards the suction side or back of the blade and that gains of the order of 5-8% may be possible. However, no experimental verification is given.

## The Grim vane wheel

This device, the concept and theory of which were first put forward by Grim in 1966, comprises a freely rotating vane wheel behind the propeller (Fig. 4). The inner part of the vane wheel blades act as turbine blades driven by the slipstream of the propeller and extract energy from the slipstream in the form of torque and negative thrust. The parts of the vane wheel outside the propeller slipstream are shaped as propeller blades which develop a torque equal to that for the turbine blades and a forward thrust greater than the negative thrust of the turbine.

Grim's original work demonstrated that the optimum efficiency of the propeller and vane wheel would be a maximum when the diameter of the vane wheel was 60-80% greater than the propeller diameter. This was clearly impracticable and the idea received little attention at the time. More recent work[8] has shown that gains in propeller efficiency of about 10% can be predicted for a vane wheel of about 20% greater diameter than the propeller and that this gain stems from reductions in all three components of the energy loss, viz. axial, rotational and frictional.

Grim also showed that as the number of blades on the vane wheel increases, the efficiency increases and the optimum rotational speed decreases. The rotational speed of the vane wheel shown in Fig. 4 would probably be about 40-50% of the propeller speed and the low tip speed coupled with the low thrust loading on the vane wheel blades means that cavitation is unlikely to occur on those blades and a small tip clearance between the vane wheel and the hull is acceptable.

A disadvantage of the low vane wheel speed is that during model tests the value of Reynolds number on the blades is very low and there is a large scale effect on the forces developed by the vane wheel model. This was used to explain the fact that, in model tests at HSVA, Hamburg, gains of only 5% in propeller efficiency were measured on the model while a 10% gain was predicted from the theory and was expected to be achieved at full scale.

No published information has been found regarding the influence of the vane wheel on propeller/hull interaction and the extent to which the gain in propeller efficiency is reflected by a gain in propulsive efficiency. Figure 5 shows the calculated open water efficiency of the propeller and vane wheel as a function of $C_T$ and in comparison with the conventional propeller and the ducted propeller. Also shown on the diagram are the full-scale measured efficiencies for the first two experimental applications to a small launch and a research vessel. It is claimed, from experience with the latter vessel, that stopping, backing and manoeuvring behaviour is the same as that with the conventional propeller.

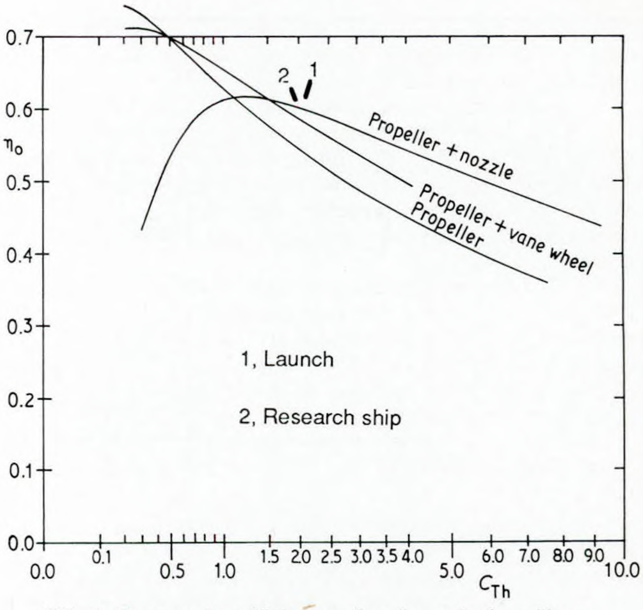

**FIG. 5: Open water efficiency of various devices [from Ref. (8)]**

## Contrarotating propellers

The contrarotating propeller (CRP) consists of two propellers on the same line of shafting, spaced a short axial distance apart and rotating in opposite directions. The use of CRPs can be traced back to the very beginning of screw propulsion. As early as 1827 Ericsson applied CRPs to overcome the directional stability problems with shallow draught craft caused by the unbalanced torque reaction of the conventional propeller.

These applications were shortlived and the major use of contrarotation commenced with the invention of the Whitehead torpedo in 1864, an application which continues to the present day. In the case of the torpedo, cancellation of the torque is necessary to prevent spinning and to maintain direction.

Cancellation of the torque implies cancellation of the rotational energy loss and an increase in efficiency in comparison with the equivalent single propeller. It has been seen that the rotational energy loss is the smallest component but well worth regaining and further gains may be achieved by taking advantage of the fact that, by sharing the total power on two propellers of the same diameter as the single propeller, the optimum rate of rotation will be reduced. Another advantage of dividing the power on to two propellers is that it becomes easier to control cavitation and its effects.

During the past 20 years a number of theoretical and experimental studies have been made in various countries which have demonstrated the advantages of contrarotation. Tests carried out in this country in the late 1960s gave for a container ship a gain of 10.9% in open water propeller efficiency and of 11.0% in propulsive efficiency, while for a 200 000 dwt tanker the propeller efficiency increased by only 3.5% and the propulsive efficiency decreased by 2.5% because of a very large increase in thrust deduction and a large decrease in relative rotative efficiency.

More recent tests in Japan and USA have given slightly more optimistic results. Tests with a model of a 97 000 dwt tanker carried out by Mitsubishi Heavy Industries gave gains of 7% and 12% in propeller efficiency and propulsive efficiency, respectively, and for a container ship, which was the subject of a MarAd research project, the corresponding values were 7% and 13%.

The major obstacle to the application of contrarotating propellers to merchant vessels has been the requirement to provide a contrarotating gearbox and shafting system with the attendant problems of technical complexity and cost. With other, simpler devices offering comparable advantages, it seems even less likely that the use of contrarotation could be justified.

## Fixed flow straightening devices

The idea of reducing the rotational energy loss by fixed guide vanes can also be traced well back into the history of screw propulsion. Apparently they were not particularly effective and their use was not widespread but there is now renewed interest in such devices.

The device consists of a number of narrow blades or vanes equally spaced around a circle forward of (pre-swirl) or behind (post-swirl) the propeller, the vanes being pitched such that they induce rotational velocities opposite and equal to those induced by the action of the propeller and thus remove, or at least reduce, the rotational energy loss. The resultant flow at the vanes is dominated by the axial component and the pitch angle of the vanes is very large. This means that the thrust component of lift is small and if the frictional drag of the vanes is greater than the thrust then there will be a nett drag which will reduce the effectiveness of the device.

This effect can be related to thrust loading. At very high advance speeds and correspondingly low thrust loading, the thrust will be negative and taken together with the frictional drag will act to increase the total resistance. As the thrust loading increases this effect will diminish and at the high thrust loadings associated with slow, full-form vessels there could well be a nett forward thrust. At the moment it is difficult to do more than generalise since the action and effectiveness of the vanes will depend very much on the nature of the flow from the hull and any influence which the vanes may have on that flow.

Mitsubishi carried out tests with tanker models fitted with a range of propulsive devices including guide vanes (reaction fins in their terminology) fitted forward of the propeller, an open propeller, a conventional ducted propeller and two ducts placed forward of the propeller. They claimed that the results demonstrated that the reaction fins gave the highest propulsive efficiency.

At Yokohoma University design studies and model tests have been carried out for a propeller with guide vanes fitted downstream. Full scale predictions for a 213 m LBP bulk carrier with $C_B = 0.80$ suggest a gain in propulsive efficiency of 9%, ie 5% from an increase in propeller efficiency and 4% from a decrease in thrust deduction.

As with the other devices involving fixed appendages there is some difficulty in predicting full-scale performance because of scale effects.

## Schneekluth wake distributor duct

In its basic form this device consists of a duct attached to the hull above the shaft (Fig. 6) and influencing the flow into the upper quadrant of the propeller. Variants include two half ducts on either side of the stern or one half duct on one side only.

The idea of placing a flow accelerating device in the upper part of the aperture is long established as a means of reducing unsteady propeller cavitation and the associated vibration excitation. These devices have taken the form of fins and partial tunnels and usually involve an increase in ship resistance. The Schneekluth duct is essentially a wake-correcting device but claims are also made for it as an energy saving device.

It is claimed that because the propeller will work in a more uniform stream the efficiency will be greater but this is contrary to the concept of relative rotative efficiency, which suggests that the propeller works more efficiently in a non-uniform stream. The mean advance speed will of course be increased and the propeller design point will correspond to an increase in open water efficiency but this could be offset by a reduction in relative rotative efficiency.

A non-axisymmetric duct or half ducts can be used to generate a rotational flow to counter that induced by the propeller but the duct will only influence part of the propeller disc and only a partial recovery of the energy loss will be possible.

Because of the reduction in cavitation and vibration excitation, the propeller diameter and its efficiency can be increased. This can only be achieved if the propeller rate of rotation can be reduced to match the increased diameter and a similar effect could probably be achieved more simply by means of blade skew.

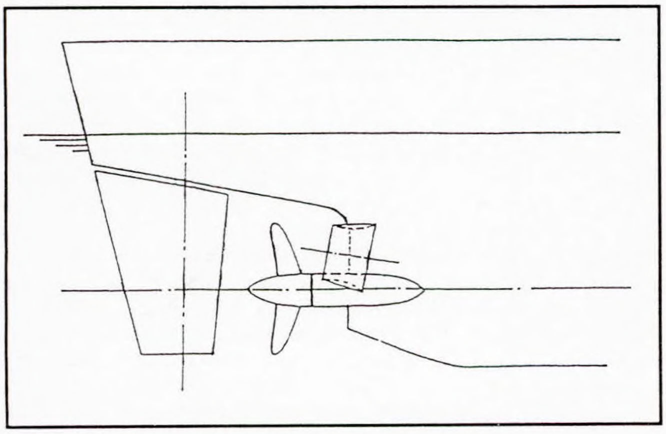

FIG. 6: Schneekluth wake distributor duct

A further claim is that the duct will produce a nett thrust. This is probably true but the duct is small in comparison with a conventional duct and placing it forward of the propeller will reduce its effectiveness.

Finally, it is claimed that the duct will reduce flow separation on the after end of the hull and reduce the viscous resistance. This will depend on the hull form and the influence of the small duct will be limited.

If all the gains claimed could be achieved simultaneously then a worthwhile increase in propulsive efficiency may be attained. Predictions based on model tests have suggested an increase of the order of 6% to 11% but no published information on full-scale performance has been found.

## Tandem propellers

To date there has been no suggestion that tandem propellers, ie two propellers on the same shaft rotating in the same direction, should be used as energy saving devices, probably because they have always been considered to be inherently less efficient than an equivalent single propeller. Where tandem propellers have been considered, it has usually been as a means of overcoming problems, particularly cavitation, associated with the transmission of a relatively high power through a single shaft.

In recent years tandem propellers have been fitted to a number of ships built in China, with the object of reducing vibration excitation. The design and model testing programme associated with these applications has suggested that it is possible to design tandem propellers with a greater open water efficiency than the equivalent single propeller. If this is correct, and it could be coupled with favourable hull/propeller interaction, then tandem propellers could become a viable energy-saving propulsive device.

## CONCLUSIONS

The nature and action of some of the unconventional propulsors currently proposed as energy-saving devices have been described and discussed. Those devices which derive their benefits largely from increases in propeller efficiency should, providing they have a sound theoretical basis, achieve their predicted performance.

The performance of devices which rely on gains in hull efficiency may be difficult to quantify by model experiments and their application becomes, to a certain extent, an act of faith. It is important that the performance of a proposed propulsor should be compared with that of the equivalent, fully optimised conventional propeller.

## REFERENCES

1. RINA Symposium on Ducted Propellers, London (May 1973)
2. H. Narita et al., 'Development and full-scale experiences of a novel integrated duct propeller'. *Trans SNAME*, Vol. 89 (1981)
3. G. P. Gomez 'An innovation in the design of screw propellers'. *Ingenieria Naval* (December 1976)
4. R. Ruiz-Fornells, 'TVF propeller development: Design process and first experimental results'. Symposium on Energy Saving in Ship's Running and Operation, Madrid (May 1981)
5. R. Ruiz-Fornells and G. P. Gomez, 'Service results with the TVF propeller duct system and its economics for newbuildings and retrofits'. The Motor Ship 6th International Marine Conference, London (March 1984)
6. G. P. Gomez, 'Blade tip loaded propellers adapted to the fluid vein crossing through the propeller disc'. 6th Lips Propeller Symposium (May 1986)
7. S. V. Andersen, and P. Andersen 'Hydrodynamic design of propellers with unconventional geometry'. *Trans RINA* (January 1987)
8. J. Blaurock, 'Propeller plus vane wheel, an unconventional propulsive system'. International Symposium on Ship Hydrodynamics and Energy Saving, Madrid (September 1983)

# Discussion

**D. K. BROWN** (Ministry of Defence): Since I am the first contributor to the discussion, I should like to begin by congratulating the Institute of Marine Engineers on arranging this meeting and the authors for their interesting papers.

Some of you may wonder why, as a warship designer, I should be interested in underwater efficiency. My concern is the same as yours and indeed greater in some respects. A gas-turbine frigate burns some 8000 tonnes of fuel each year for propulsion, and since much of this is supplied at sea by replenishment tankers the true cost is high, about £250-300 per tonne. This cost means that the Net Present Value of a 1% saving in fuel consumption is some £170 000 (discounted at 10% over 20 years), which should encourage economy measures.

My first question is to Mr Osborne and is to ask if his company uses any form of incentive clause in contracts with shipbuilders aimed at acquiring economical ships? Do the figures in the appendix allow for the cost of extra or extended dockings, together with loss of earnings over the period in dock?

Mr Osborne raised a question which I had thought to ask — what is the meaning of RRE? I suggest that by its definition it must include all the errors in other components of propulsive efficiency but, in addition, it must represent the different extent of laminar flow on the small model propeller used in 'open' and 'behind' tests.

In assessing the various fittings described, was any account taken of their effect on astern performance or stopping?

I should like Dr Patience to provide more information on the overlapping propellers which he mentioned in his presentation. He claimed a 15% overall improvement which I find difficult to understand. The losses in a conventional twin-screw arrangment for the likely loading of a cruise liner are quite small and it is hard to see where a 15% improvement could come from unless the original design was hydrodynamically poor. This last remark is not intended to be derogatory as I believe that many of these 'bolt on' improvements are of most value when the original design was constrained by other considerations to non-optimum hydrodynamic characteristics.

Turning now to Dr Townsin, I should like to ask to what extent the benefits of the smooth hull in reducing drag are offset by reduction in the quasi-propulsive coefficient due to a thinner boundary layer? Abrasion of antifouling coatings is a problem in warships too and I wonder if there is merit in using sheet cupro-nickel as an antifouling in way of anchors.

I should also like Dr Townsin to expand on his theme that 'fish don't foul'. To what extent is this statement true — I have seen limpet-like growth on older fish. Does the future lie with a non-stick surface?

I was delighted with Dr Glover's comments on TVF propellers etc. It was time that such claims were put in proportion.

Dr Glover may be interested in some work on tandem propellers carried out at the Admiralty Experiment Works in 1949-50 on an early variant of the coastal minesweeper. When towing sweeps at twelve knots the twin-shaft tandem propellers of 5 ft diameter required a dhp of 788/shaft (efficiency 0.66) whilst twin single propellers of 5 ft 6 in diameter needed 805 hp (efficiency 0.59). Eventually, even larger, single propellers were fitted. Similar results were obtained with an inshore minesweeper application where tandem propellers of 3 ft diameter had the same overall performance of single propellers of 3 ft 6 in diameter. In both cases, it was found possible to fit larger, single propellers and the development of tandem propellers was not pursued.

There are two 'performance enhancers' applicable to warships (and probabaly fast, twin-screw merchant ships) which have not been mentioned. The first is the transom flap or wedge, on which a paper is shortly to be read to RINA. The authors of that paper show that the effect on resistance is to reduce drag at top speed and increase it at low speed, with benefit and penalty increasing with flap angle. The paper does not discuss the effect on hull efficiency, which is improved considerably by a flap, the improvement increasing with flap angle and virtually independent of speed. Both wake and thrust deduction change in a favourable manner, suggesting that our ignorance of the physical significance of the thrust deduction fraction may be as great as that of RRE. The combined effect is to justify a flap angle much greater than would be drawn from resistance considerations alone showing gains in both top speed and average fuel consumption. The benefits are greatest in the case of ships which, for non-hydroynamic reasons, have an over-large transom.

The other device which the warship designer can use is the shaft bracket whose arms can be used as inlet guide vanes. For a frigate, a 1° angle of incidence of the two arms adds about 1% to wake, improving hull efficiency (added drag is not measurable).

To conclude, I would like to suggest that work on the 'pay back' of adding efficiency devices should be extended to the original design. The financial return from a skilled design team with adequate resources must be very high even though difficult to measure.

**C. C. SCHNEIDERS** (Lips BV): Discussing propellers with end plates, Mr Glover refers to the ring propeller. I should like to mention a paper by L. van Gunsteren entitled 'Ring propellers' and presented to this Institute in 1970. From this paper it appears that under certain conditions ring propellers can have better efficiency than conventional open propellers.

Regarding the Schneekluth wake improvement duct, Mr Osborne's papers presented both to this Technical Meeting and to the Proceedings of the 6th Lips Propeller Symposium in 1986 quote actual improvements as measured on ships with and without the duct. An appreciable reduction of existing vibration was noticed on the MV *Bowtrader*, owned by East Coast Aggregates Ltd, after fitting this wake improvement duct.

**B. THYGESEN** (Gotaas-Larsen Ltd): The information given on pages 5 and 25-27 regarding ducted propellers reminds me of a number of initial difficulties my company experienced with such installations. However, the propeller was fitted inside the duct.

During the early 1970s we took delivery of a series of VLCCs with ducted propellers of Stroemmen Staal (Norway) design, built under licence in Japan.

The vessel's particulars were:

215 782 dwt
Maximum continuous rating 30 000 shp at 90 rev/min
Speed: 16.5 knots
Stainless-steel five-bladed propeller bolted to the boss
7800 mm diameter
7420 mm pitch

The first vessel experienced a number of problems with the duct. Cavitation caused damage to the duct surface at about 1 o'clock seen from aft. One of the duct compartments became full with water and the outer surface suffered severe damage over a relatively short time. The duct eventually required extensive repairs and I believe we were among the very first companies to install air injection on the ducted propellers of VLCCs. The air injection, together with improved materials for the duct surface, reduced the cavitation damage caused to the duct.

We also made an additional arrangment whereby a slight air pressure was applied to the duct internally by connecting it to the engine room bilge system. This was done for early leakage detection and to prevent filling and damage in case a crack should cause the duct to leak.

A manhole was made for access from the aft peak tank into the duct itself — it was quite an experience to sit inside the duct when the vessel was going full speed!

We later discovered that it was not necessary to run the air compressors at all draughts. The duct itself 'sucked air' through the air injection system and the compressors could be stopped. There were debates at the time about the quantity of air required for injection.

The cavitation started causing problems for the duct at about 80 rev/min and up to 90 rev/min, which was full speed. The clearance between the propeller tip and the duct was only about 50 mm (if my memory is correct).

To have the propeller inside the duct did make a tailshaft survey more difficult. There were difficulties in guiding the propeller out of and in to the duct with the rudder in place.

It appears to me that the Mitsui integrated duct system is a great improvement. The damage caused by cavitation is eliminated and the system does not affect tailshaft jobs at all. In addition, no air injection system is required. All in all, a simple installation.

**Dr J. W. ENGLISH** (Consultant, Maritime Technology): I think that the authors of the three papers on propulsive efficiency and propellers might have stressed rather more the important improvements that have been made in diesel engine performance over the recent years and since the oil crisis of the 1970s. This has reduced fuel consumption and lowered rotational speeds thus permitting larger diameter screws to be fitted with improved efficiency. Add to these factors the slower ship speeds prevalent on many full-form vessels compared with the conditions in the 1970s, again lowering propeller loading and increasing efficiency, and ship propulsive efficiency has improved very significantly since then.

The motivation to fit add-on devices, intended to save fuel on ships, arose in the 1970s before the improvements in diesel engines had been made and, therefore, it has become more difficult to justify fitting these devices today. Furthermore the percentage improvements often quoted seem to refer to the earlier conditions rather than the later ones.

Another effect of slower running diesels and lower ship speeds today is the almost total elimination of the propeller cavitation induced pressure problem that plagued many ships in the 1960s and 1970s. This is not to say that this problem will not occur again, but its incidence is expected to be less.

At the risk of being labelled a cynic, or more likely a heretic, by Mr Osborne, there are a number of points and questions I would like to raise in connection wiith the passive add-on devices. I would categorize these in two groups using the author's names for them:

| Group I | Group II |
|---|---|
| Wake improvement duct | Rudder bulb/fin |
| Guide fins | Added thrust fin |
| Integrated ducted propeller | |

The Group I devices are the most difficult to justify fitting because they depend for their action on changing the propeller intake flow in a favourable manner. For instance the wake improvement duct is supposed to accelerate the flow into the top half of the propeller disk and decelerate it slightly in the lower half. Recalling that the water in the top region contains a lot of boundary layer water moving very slowly relative to the ship, having little kinetic energy, would the author please explain where the energy or power comes from to accelerate this water and increase its kinetic energy. If it occurs because of the propeller induction effect, this should lead to an unfavourable thrust deduction effect. Fundamental points like these require answering and quantifying in detail, which in the circumstances is extremely difficult because of the relatively small velocity and pressure changes that occur in the region upstream of an operating propeller, and the author might refer to Ref. 1 to see just how small these changes can be.

Acting as a devil's advocate, I suggest that it is easy to counter most of the favourable performance claims with unfavourable opposites in the case of Group I. One then has to look at results to try and judge whether a true improvement is being experienced. These can be obtained from model tests, ship trials and ship performance monitoring.

Model tests suffer from a viscous scale effect in the important stern/propeller region clouding comparisons, and in the case of full-form ships in particular there is more scope for experimental uncertainty. Any experimental result is liable to uncertainty, and when one is looking for small changes it is important that the uncertainty range is specified. This is not a common procedure in ship model testing at present but will become so in the future. Then, for instance, if the 95% uncertainty limits in comparable model power predicitions from two models, one with the device and one without, overlap, there is a chance, at this level of probability, that no improvement has been experienced. Reference 2 describes a method of model experimenting and analysis whereby uncertainty ranges can be determined.

Generally speaking, ship trial results are subject to higher levels of uncertainty than model experiments due to several causes, unless very demanding and expensive trials are conducted. This could involve redocking a vessel immediately before the trials and duplicating all measurements with alternative measuring devices.

Ships performance monitoring must also contain a level of uncertainty which I would expect to be large. In fact it would be very interesting to subject good quality monitored ship power performance data to uncertainty analysis in an attempt to obtain a scientifically based comparison and one devoid of personal subjectivity as far as possible. Has the author attempted this or thought of doing it? If not, is he interested in pursuing the idea?

Another device in Group I that I would like to comment on is guide fins. Here Mr Osborne mentions three possible reasons how they may improve performance, although I would question the practical plausibility of all of them. I agree that it should be beneficial to direct water aftwards instead of downwards, but only if this can be done with a nett gain. The factor that Mr Osborne did not mention, however, is the drag penalty that arises when attempting to turn fluid through a large angle, thereby changing its momentum, with a cascade of highly three-dimensional turning vanes.

Assuming that the vanes can be mounted in the correct direction and position on the ship to collect and divert the water, which we shall assume is steady in direction but may not be in practice when bilge vortices are present, then the dominant drag due to the vanes will be the induced drag arising from the tip vorticity. For a wing inclined to a stream, this is proportional to the square of the lift and the inverse of the aspect ratio. I cannot believe that the low aspect ratio vanes I have seen on a ship, made from thick bent plate with square edges and intended to turn the water through nearly 90°, will do this at a nett gain — more likely at a nett loss in my opinion.

I consider that the devices in Group II are the more likely to lead to small genuine improvements but the extent and cost of properly physically modelling the arrangment to determine whether a true gain exsits may deter many owners from speculating on this. In connection with all Group I and II devices I would advise prospective owners to view the claims with reserve since sometimes these appear to be based on subjective assessment instead of hard factual data.

Finally, Grim's vane wheel, mentioned by both Mr Osborne and Dr Glover, or in engineering terms a hydraulic torque/thrust convertor, is an active device which to some extent overcomes the problem of the fixed speed of the engine and propeller. Having chosen an engine with a fixed speed and an optimised propeller diameter, it is then possible to obtain some of the advantage of a large-diameter propeller that would require a lower engine speed. The source of propulsive efficiency improvements from this device are more easily idntified, although as Mr Osborne mentions the rudder already present removes some slipstream swirl. It seems strange, however, that in the case of the recently refitted QEII, where diesel electric machinery has been installed, the owners have used a vane wheel when they could probably have fitted a slower-speed large-diameter propeller with a higher efficiency.

Dr Glover also talks of contra-rotating porpellers, tandem propellers and propellers with end plates. I am pleased to see him quietly deflate extravagant claims of improvements supposed to arise from propeller end plates. Measured wing data exist which show how large an end plate must be in order to be effective and it is surprisingly large compared with thoses end plates mooted for propellers. Does he know of any commercial aircraft flying with winglets?

From the paper by Dr Patience and Mr Bodger, the reader could be excused for concluding that all that needs to be known about propellers is known, but I can assure them that this is not so, although in the present day conditions of low ship speeds and propeller loadings, most of the authors' claims are no doubt justified. Hitting the correct propeller speed is still at the heart of a successful propeller design, as it was in Professor Burrill's day, only now it is more tricky because of the lower engine speeds. Acceptable propeller efficiency should follow, using established principles of propeller and wing theory.

Problems can still arise, however, in those few cases today of moderately fast ships with heavily loaded propellers, perhaps because of a diameter restriction, when cavitation-induced vibration can be a problem still. The incorporation of high balanced skew (preferably) is about the most effective way of overcomming this problem, but it would be wrong to give the impression that all is known about this. Each application of this type is different and can represent a substantial research effort to get a good solution, eg Ref. 3. Off-blade cavitation due to vortex bursting has been identified as an important source of higher harmonic pressures but much more experimental work on this topic is required. In this respect I think that the information given in Fig. 4 of the paper is misleading and oversimplified.

**References**

1. Propeller Committee Report, Appendix 2, 14th International Towing Tank Conference (1975).
2. J. W. English and Y. K. Kwak, 'Fairing of data from ship model propulsion experiments'. PRADS '87, Third International Symposium, The Norwegian Institute of Technology, Trondheim (1987).
3. J. B. Hadler, J. W. English and S. K. Gupta, 'Program to minimize propeller-induced vibration on converted Maersk 'E' class ships'. *Trans SNAME*, Annual Meeting (1984).

## Authors replies

### M. G. Osborne

To answer Mr Brown, the results of the study have, in general terms, shown that it is older ships that are more likely to benefit from the application of these devices. It is more difficult to produce an economical justification for fitting them to today's newbuildings in which modern technology is used for the design of the aft end and propeller. Nevertheless we certainly believe that shipyards should be induced to develop economical hulls and propulsion systems. The time to do this is usually before a contract is signed.

On his question of drydocking costs, it is usually possible to fit these devices within a planned docking, and the cost of dock hire and off-hire time is therefore not included in the example in the appendix.

I fully accept, and share to some extent, Dr English's secepticism about the claims made for some of these 'add-ons'. However, we have found that measurable improvements can be realised in service even though the precise physics involved may not be understood. In answer to his query about the means of accelerating the flow into the wake duct, the major part of which is operating outside the boundary layer, I offer the designer's explanation given in Ref. 1:

> 'The basic principle underlying the application of this device is that the flow creates a circulation around the aerofoil section of half ring ducts, which accelerates the flow in the area enclosed by them and retards the same in their outer environment'.

I entirely agree with Dr English's comments about the use of model tests in the prediction of full-scale performance gains. Visulization tests of the potential flow can be beneficial, but to use these as quantification techniques, especially in the absence of accurate full-scale data to check correlation, could be misleading.

It is encouraging to note the progress being made in the establishment of confidence levels for model testing, and I look forward to this becoming standard practice.

The question of full-scale performance monitoring is worth a paper by itself. As Dr English rightly points out, there are uncertainties in the accuracy of some measurements, especially ship speed through the water. However, long-term stability and resolution are probably more important when we are looking for improvements in performance over time. Reference 2 addresses this point and describes the equipment used by Shell ships to monitor performance. My own approach to analysis of full-scale data has been to put more confidence in those measurments, such as shaft speed, which can be determined with greater accuracy. Propeller characteristic curves can also provide a useful check on the quality of monitored data. Reference 3 describes how this is done.

**References**

1. H. Schneekluth, 'The wake duct, old and new aspects'. 6th Lips Propeller Symposium (1986).
2. S. L. Whipps, 'On-line ship performance monitoring system: Operational experience and design requirements'. *Trans.I.Mar.E. (TM)*, Vol. 98, Paper 8 (1986).
3. M. G. Osborne, 'Monitoring the service performance of propellers and propulsion devices'. 6th Lips Propeller Symposium (1986).

### G. Patience and L. Bodger

The 15% improvement in propulsive efficiency with overlapping propellers refered to by Mr Brown was demonstrated at model scale in the course of a joint research project involving Stone Manganese Marine Ltd, a shipbuilder and a model testing establishment. Various configurations of overlapping propellers were tested and the results compared using a corresponding conventional twin-screw passenger ship hull form as a basis.

The basis ship form was not considered to be 'hydrodynamically poor', but it is fair to say that the overall hydrodynamic performance was probably sub-optimum due to the use of stock rather than specifically designed propellers. The whole concept of overlapping screws is of course based on the objective of increasing the level of energy recovery from the boundary layer of a twin-screw ship without resssorting to the mechanical complexity of contra-rotating propellers.

We concur with Dr English's remarks concerning the advances made in diesel engine technology, but it is felt that these are not of prime relevance in a meeting dedicated to aspects of hydrodynamic efficiency. Whilst it is evident that the installation of very slow running diesels is becoming more commonplace, as pratical propeller designers we are, nevertheless, still frequently faced with the task of designing propellers to suit relatively high revolutions.

Dr English links the reduced incidence of cavitation-related vibration problems with the appearance of long stroke diesel engines. Whilst it is to some extent true to say that machinery of this type does tend to ease some of the propeller designers' problems, it is also true to say that over many years, very many ships, ranging from VLCCs to large container ships, fitted with a variety of propulsive plants, have been supplied with Meridian propellers which proved eminently satisfactory in service both in terms of efficiency and vibration excitement.

We consider that in this connection due recognition should be given to: the introduction of advanced pressure distribution calculations into routine design office work; the increasing attention paid by hull designers to the question of obtaining a favourable inflow into the propeller disc; the appreciation of the often widely differing cavitation environment between loaded and ballast conditions; the increased use of cavitation tunnel testing; and the improvements in experimental techniques and correlation with full-scale results.

The incorporation of increased skewback into a design is one means by which the levels of pressure impulses associated with the action of the propeller in the non-uniform wake field may be reduced. Figure 4 of the paper provides an illustration of the scale of reduction in pressure impulses achieved in one particular instance, and is not presented for general application.

Finally, the prediction of the levels of the higher harmonics of the excitation forces at full scale is still at an early stage in its developmment. We consider that there is a real need for further extensive research both at model and full scale, with appropriate correlation studies, before sufficient confidence in the prediction methods can be obtained.

## R. L. Townsin

To answer Mr Brown, as far as a twin-screw warship is concerned I would not expect any noticeable change in QPC due to smoothing of the hull. Indeed, generally any noticeable change of this sort is lkely to be the result of the elimination of fouling rather than a change of roughness.

I am not sure about the local application of cupro-nickel. The electrolytic interaction of the Cu-Ni and locally bared steel substrate is likely to present problems.

It is true that some fish and marine mammals do acquire shelled attachments. The generalised statement 'fish don't foul' applies particularly to fast swimming fish. Also, the nature of the drag reduction resulting from the slime coatings on these fish varies but has common characteristics among the various groups of predators and their prey.

## E. J. Glover

Mr Brown's data on the predicted performance of tandem propellers on the early coastal minesweepers are interesting but slightly confusing because the powers suggest a gain of 2% but the increase in the efficiency is about 12%. I assume that the former values are more likely to be correct and it is difficult, without more details, to comment on the source of the small improvement in performance. If the tandem propellers are designed to produce the same total thrust as the single propeller when running at the same rate of rotation, then their optimum diameter will be less than that of the single propeller when running at the same rate of rotation, the thrust loading coefficient of the combined propulsor will be greater than that of the sigle propeller and its ideal efficiency will be smaller.

Also to achieve comparable margins against cavitation, the total blade surface area of the tandem propellers will be considerably larger than that of the single propeller, resulting in a further reduction in efficiency due to increased frictional drag. For these reasons one would expect the open water efficiency of the tandem propeller set to be less than that of the equivalent single propeller designed for the same rate of rotation.

If, on the other hand, the diameter of the tandem propeller is made equal to that of the single propeller and the rate of rotation of the tandems is reduced to the optimum corresponding to that diameter, then it may be possible to achieve an efficiency approaching that of the single propeller.

I think it more likely that the improvement with the minesweeper results from changes in propeller/hull interaction and it might be of interest to look at some of the results of work carried out about 20 years ago in collaboration with SMM Ltd, which are given in more detail in Ref. 1.

Model tests were carried out with a single propeller and two sets of tandems designed for a VLCC. The first set of tandems was designed for the same rate of rotation as the single propeller and had an open water efficiency 10% less than that of the single propeller. However, the wake fraction was increased by 3.1%, the thrust deduction was reduced by 3.4% and the hull efficiency was thus increased by 14.9%. This was partly offset by a 2.4% reduction in relative rotative efficiency giving a final increase in propulsive efficiency of 1.4%. The second set had the same diameter as the single propeller and a reduced rate of rotation.

In this case the open water efficiency was increased by 1.3%, the hull efficiency was reduced by 2.1% and the relative rotative efficiency was increased by 2.4% resulting in a nett increase in propulsive efficiency of 1.5%. These improvements in performance were unexpected and derived almost entirely from favourable changes in propeller/hull interaction. Any excitement we may have felt regarding the prospects for tandem propellers was tempered by that fact that tests with a set of tandems for another vessel suggested a reduction of 3.5% in propulsive efficiency due to unfavourable interaction effects.

This work provides a good example of how far we are from being able to achieve a proper optimisation of the combined hull and propulsor and also of the danger of predicting ship performance with unconventional propulsors on the basis of interaction factors derived from tests with conventional propellers.

This has been a long reply to Mr Brown's short comment on tandem propellers and I would like to conclude it by referring again to the Chinese work mentioned in the paper. On re-reading the report on this work (Ref. 2), I find that the quoted gain in propeller efficiency is derived on the basis that the tandem propellers have the same total blade surface area as the single propeller. This is not correct and if the blade surface area of the tandems were increased to give the same cavitation performance as the single propeller then the efficiency would fall below that of the single propeller.

Mr. Brown's remarks on the nature of relative rotative efficiency were addressed to Mr Osborne but I would also like to comment. I am sure that Mr Brown does not wish to take us back to the bad old days when RRE was considered by some to be a book-keeping factor introduced by the tank to account for the fact that, due to experimental errors, the product of the hull efficiency and propeller open water efficiency was not equal to the propulsive efficiency measured as the ratio of the effective power to the delivered power.

In properly conducted experiments, using modern dynamometers and speed measuring equipment, experimental error should be low. It is agreed that the lower propeller Reynold's Number associated with the self-propulsion experiments may result in laminar flow on the blades which would not necessarily occur during the open water experiments. If the laminar flow has a measurable effect on the blade forces then it will influence the analysis of the wake fraction and the relative rotative efficiency. However, laminar flow will not affect every propeller during self-propulsion experiments and we must accept that there is some physical significance to RRE, ie it represents the difference in performance of a propeller working in a non-uniform, turbulent flow and that when working in a uniform, undisturbed flow of the same mean speed.

The influence of the transom flap on hull efficiency is interesting but surely does not cast any doubts on our understanding of the physical significance of thrust deduction. It is to be expected that any changes in the hull flow will be reflected by changes in hull/propeller interaction.

The use of the shaft brackets as guide vanes is interesting but must increase the risk of cavitation on the brackets at high ship speeds.

Mr. Schneiders refers to Dr van Gunsteren's work on ring propellers. I am familiar with this work and, in fact, used its conclusions as the basis for my remarks regarding the inefficiency of ring propellers. My understanding is that van Gunsteren showed that in the free-running condition the ring propeller would be less efficient than the conventional, open propeller unless the diameter of the latter was severely restricted in comparison with its optimum value. At the bollard, the ring propeller would be more effective than the open propeller but a lot less efficient than the conventional ducted propeller.

It was not my intention to suggest that the fitting of a Schneekluth wake distributor would not lead to an improvement in performance. The points I was trying to make were that each claimed improvement could only result in a small gain in efficiency and that, to my knowledge, there are no published results of properly conducted comparative tests, either at model or full scale. I agree that Mr Osborne quotes improved performance after the fitting of the duct but he also says that it is difficult to be precise about how much of the improvement comes from fitting the duct and how much from the cleaning of the hull and propeller at the same dry-docking.

The reduced vibration experienced with the MV *Bowmaker* confirms my point that flow-modifying devices of this type have normally been considered as a means of reducing vibration excitation and not as a means of improving propulsive efficiency.

Mr. Thygesen's description of the problems experienced with the ducted propellers on the 215 000 dwt VLCCs is interesting. In fact it was these ships that I was thinking of when I wrote the paragraph on air injection.

I am not sure that the Mitsui system provides a completely adequate alternative to the normal ducted propeller since the anticipated gains are smaller and may not be achievable with some hull forms. The laying-up and cancellation of these large ships removed the motivation for continued efforts to overcome the cavitation problem. I would suggest that, if this had not happened, a satisfactory design solution would have been achieved which would have obviated the need for operational expedients such as air injection.

Dr English raises the point of the benefits of large, slow-running propellers. In the last sentence of the paper I said that it is important that the performance of a proposed propulsor should be compared with that of the equivalent, fully optimised, conventional propeller. The optimisation of the conventional propeller should include the choice of the lowest possible rate of rotation and I agree with Dr English that, if this is done, in many cases the addition of active or passive devices becomes more difficult to justify. In my opening sentence I said 'The conventional, solid, fixed-pitch propeller provides a cheap and effective means of propulsion etc.' and I am still inclined to think that for most ships it is the most appropriate means of propulsion.

I am pleased that Dr English agrees with my remarks regarding the efficacy of propeller end-plates. A number of small executive jets have winglets and an increasing number of proposals are being made for their application to the wings of large passenger aircraft such as the Airbus A310, A320 and A340 and the MD-11 for which an improvement in fuel-efficiency of 3% is predicted. Similar small gains may be achievable with propeller end-plates but cavitation could be a problem.

## References

1. E. J. Glover, 'Contarotating Propellers and Tandem Propellers'. Symposium on Advances in Propeller Research and Design, Gdansk (February 1981).
2. J. B. Hadler, P. C. Pien, C. P. Sheng, 'A Systematic Series of Tandem Propellers'. Mar.Ad. Report No. MA-RD-760-84047 (July 1984).

Published for THE INSTITUTE OF MARINE ENGINEERS by Marine Management (Holdings) Ltd (England Reg. No. 1100685) both of
The Memorial Building, 76 Mark Lane, London EC3R 7JN. Printed in Northern Ireland by W & G Baird, The Greystone Press, Antrim