Paper read at the Royal Institution of Naval Architects on Tuesday, 2 December 1975

AUXILIARY BOILERS — THEIR MANAGEMENT AND CONTROL

A.F. Hodgkin, C.Eng., M.I.Mar.E., M.I.Mech.E.*

D. V. E. Watson, C.Eng., M.I.Mar.E.*

E. L. Wood, Chartered Measurement and Control Technologist, M.Inst.M.C., T.Eng, (CEI)†

In spite of the insistent and growing claims of a variety of alternatives steam has maintained its attractions as a convenient source of heat and power in numerous seagoing circumstances, even where steam for main propulsion is not required. In each of these cases means of generating auxiliary steam is needed and boilers have been designed to suit every purpose. To reduce the need for manual intervention and supervision and to provide safe operation at consistent levels of efficiency, management systems have been devised for the combustion equipment and the whole plant is capable of automation to any required degree. The intent of the paper is to stimulate a discussion, based on operating experience, which will indicate the nature of future requirements.

INTRODUCTION

To set the perspective it is necessary to consider how the duty required of auxiliary boilers has developed over the last 20 years, and the range of duties which are currently in demand. There were times when 10 t/h of steam was sufficient, supplied at about 10 bar saturated. Scotch marine boilers and other fire tube types have proved satisfactory in these cases, their tolerance to water conditions and operating standards making them particularly suitable for auxiliary purposes where supervision may become unavoidably irregular. The relatively large water capacity of the fire tube boiler has advantages in that peak steam demands can be met for short periods by closing the feed valves and allowing the boiler water level to fall. Whilst this is happening only the latent heat is being added to the water and consequently a greater output is obtained from a given fuel input.

When steam is required principally for heating duties, high pressures are not required, but when auxiliary machinery is involved higher pressures lead to improved economy. Therefore development in terms of steam quantity and pressure have continued side by side. Higher pressures forced the introduction of the water tube boiler for auxiliary purposes and increases in required evaporation are more easily accomplished with this type.

WATER TUBE AUXILIARY BOILERS

There are now many styles of water tube boiler but originally simple straight tube header boilers were used. By the early 1960s outputs had reached 30 t/h and pressures had on occasion been set as high as 27·5 bar, and interest had arisen in having superheated steam. At this period the header boiler was reaching the end of its range of economic usefulness and designs of bi-drum boiler with bent tubes were coming on to the market. From this point water tube auxiliary boilers have been able to keep pace with the demand for steam quantity, pressure and temperature, all of which continue to advance.

The confused state of the shipping industry defeats any accurate attempt at forecasting ship types required in the near future, but it seems fairly safe to assume that there may be a trend towards smaller and lower powered vessels. These ships may require small quantities of steam for heating duties and there are many forms of fire tube "donkey" boilers which would be capable of meeting this demand. Units of this type tend to be heavy, bulky and limited in maximum operating pressure. Whilst the latter may not prove serious, lighter and smaller designs could be attractive. To this end the use of water-tube boilers of very low output should be considered. A typical water tube boiler suitable for 2·5 t/h output is shown in Fig. 1. This can be supplied in package form including fuel pump, oil burner and forced draught fan for an all-up wet weight of 6·7 tonnes which compares with 8·9 tonnes for an equivalent fire tube arrangement. Furthermore the plan area of the former is approximately half that of the latter.

Today designs are available to suit requirements falling in the range denoted by Table I, whilst exceptions to any of these parameters can be accommodated with relative ease.

TABLE I — OPERATING CONDITIONS — STANDARD W.T. AUXILIARY BOILERS

Max. evaporation	t/h	2–113
Steam pressure	bar	7–62
Steam temperature	°C	Sat.–380
Feed temperature	°C	38–138

It is no doubt the rapid increase in size of the motor tanker that has set the pace for corresponding increases in demand for auxiliary steam. Whereas a 13 500 dwt tanker in 1955 required auxiliary boilers of 13·5 t/h output, a 135 000 dwt tanker today needs auxiliary boilers for 80 t/h, cargo pumping and tank washing duties forming the major part of the load. Maximum output from the steam plant is therefore

---

*Babcock and Wilcox (Operations) Ltd.

† Bailey Meters and Controls Ltd.

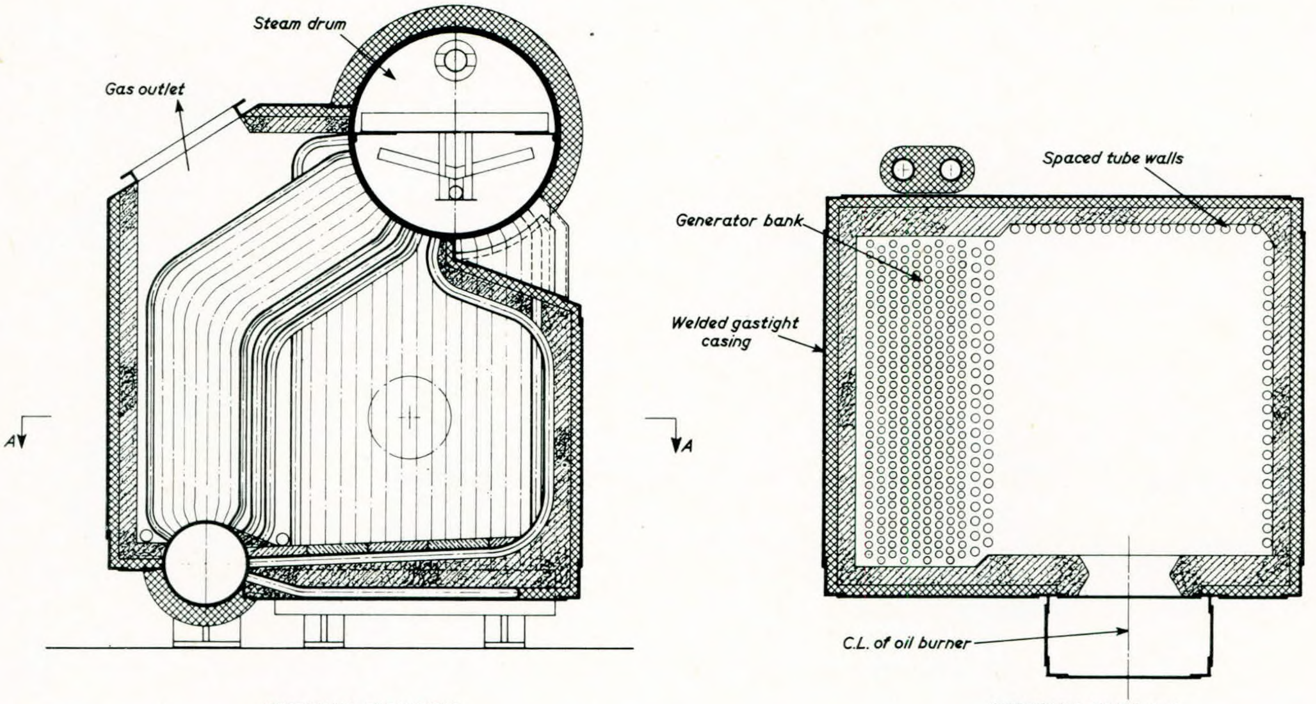

SECTIONAL ELEVATION

SECTIONAL PLAN A–A

FIG. 1

required at only relatively infrequent intervals, at other times lighter loads prevail whilst for a high proportion of the time the boiler is shut down. Also many modern steam tankers are now provided with only one main propulsion boiler, provision for emergencies being satisfied by a small auxiliary unit for moderate steam conditions. In this sphere also the size, pressure and temperature have all advanced so that whereas the earlier steam tankers with single main propulsion boiler could only rely, in an emergency, on 22·5 t/h of steam at 17 bar saturated, more recently a larger output of 70 t/h at 62 bar, 380°C has been adopted. Some of this advancement is due to the natural progression of power requirement to propel vessels of increased deadweight, but much is due to the need for sufficient power to provide security when controlling these larger vessels in adverse sea states.

ECONOMY

The bi-drum water tube boiler types currently used for auxiliary purposes have tended to change and develop alongside the larger boilers used for main propulsion. Due to the low utilization factor high efficiency has not been a main requirement, but with escalating fuel costs this assumes greater prominence. It is not likely that substantial increase in capital costs will be favoured, so that improvement in efficiency is best sought from existing equipment rather than from additional heat exchangers such as economizers or airheaters. Unless otherwise specified an auxiliary boiler is designed to burn fuel oil with about 4·5 per cent excess oxygen. The same boiler plant could readily be operated with 3 per cent excess oxygen giving a reduction in oil consumption of around 1·75 per cent due to improved boiler plant efficiency. In certain applications the improvement in excess oxygen would be beneficial for other reasons, since when used for inerting tanks the boiler flue gas should have an oxygen content not exceeding 5 per cent. This is easily obtained while the boiler is operating at high firing rate, but at reduced load excess oxygen tends to increase so that a better standard at top load permits a lower load to be reached before the 5 per cent limit is exceeded. Modern combustion equipment when combined with suitable management systems and boiler controls, can provide conditions giving high efficiency operation and low oxygen gas for inerting over a wide load range. The most onerous conditions in the latter respect occur when firing the boiler at a very low rate merely to top up the tanks with inert gas, and this would normally require operation with only one burner in use and with close control of air delivery from the forced draught fan.

Economy in the overall sense can also be improved by taking advantage of the water tube boiler's ability to provide high pressure and temperature steam so that fuel consumption is reduced when operating turbine machinery such as steam driven cargo pumps.

Emphasis on reducing maintenance costs which commenced with main propulsion boilers has also carried through into the development of auxiliary boilers. Simplicity of design to minimize capital charges is still important, but the advantages of reduced maintenance consequent upon elimination of refractory has hastened the adoption of fully water cooled boiler enclosures. Boilers originally designed with gas and air tight double casings are now adapted to membrane wall tube panel construction as commonly used on main propulsion plant and refractory is virtually eliminated. Fig. 2 shows the M11 boiler having conventional construction double cased. With this the side roof and rear of the furnace are water cooled with tangent tubes in front of a refractory lined casing, the products of combustion leave the furnace through a screen of water tubes over the whole depth of the furnace. For the largest sizes above, say, 60 to 65 t/h the burner wall is also cooled with water tubes so bent as to closely follow the contours of the burner openings in the wall. Fig. 2 also shows the modern M11M boiler developed from the M11 by the provision of a membrane tube panel enclosure.

EXHAUST GAS HEAT RECOVERY

Another area where the present day economics of ship operation should focus attention is that of exhaust heat recovery. This has been accomplished for many years by extended surface tubular heat exchangers installed in diesel engine exhaust trunking with water circulated through the tubes from an oil fired auxiliary boiler which serves additionally as a steam separator, Fig. 3. It is expected that use of this system will become more widespread so that exhaust gas boilers similar to that in Fig. 3 will be even more numerous. The forced circulation principle in this context has been widely adopted as it gives more flexibility in heat exchanger design with little risk. The risk is confined to loss of output as any circulating pump failure is not likely to cause tube damage owing to the low gas temperatures involved. Forced circulation is, however, by no means essential and by suitable choice of tube size and arrangement and provision of a steam drum at a suitable elevation, a natural circulation exhaust gas boiler can be provided.

To extract the maximum amount of heat from an exhaust gas stream it is often necessary to utilize an economizer section in the exhaust gas unit, involving risk of low temperature acid corrosion and consequent use of protected

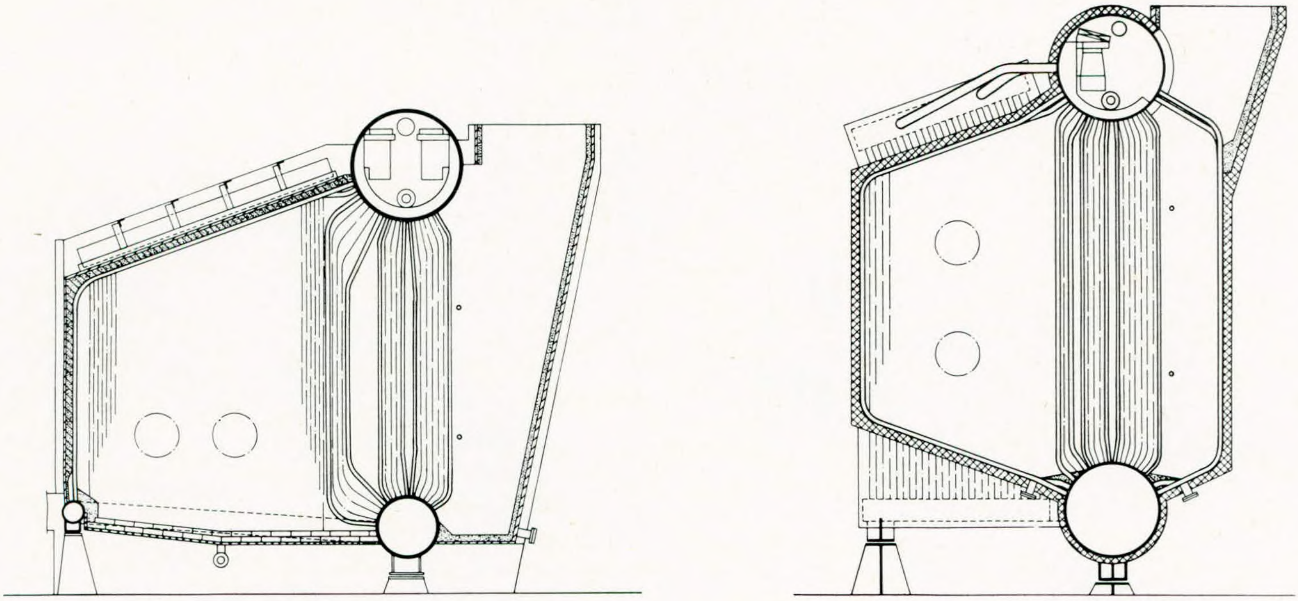

SECTIONAL ELEVATION

M11

SECTIONAL ELEVATION

M11M

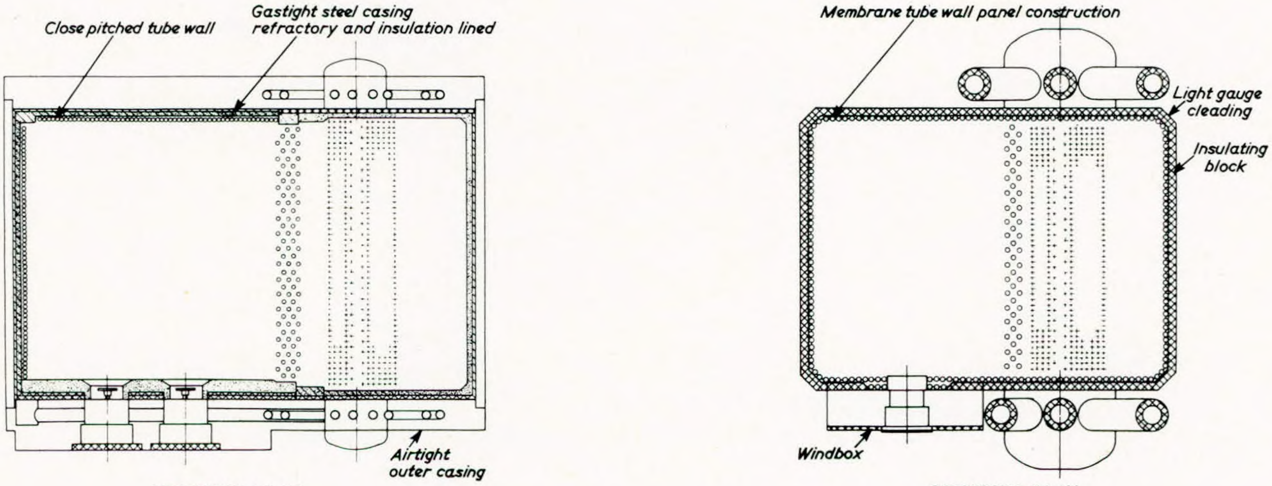

SECTIONAL PLAN

SECTIONAL PLAN

FIG. 2

heating surfaces. As an alternative, if the steam demand is suitable, more heat can be extracted from the exhaust gas, without an economizer section, by using a dual pressure system. With this steam at say 10 bar (gauge) (150 lbf/in^{2}g) for electrical generation is taken from a forced circulation heat exchanger and steam at 3 bar (gauge)(50 lbf/in^{2}g) or less, for heating purposes, taken from a separate naturally circulated exhaust gas boiler situated after the HP unit in the exhaust gas stream, Fig. 4.

Efforts continue toward a wider use of the gas turbine engine at sea and in the interests of economy this type of machine requires almost mandatory use of exhaust heat recovery. Gas flow rates and temperatures are generally higher than is the case with the diesel engine and due to the use of distillate fuel or treated heavy oil a more densely arranged heating surface is possible in the exhaust gas boiler.

With either type of main engine the steam plant should be designed as a whole rather than derive from a collection of individual and unrelated units. Indeed if proper design consideration is given it can be seen that the exhaust gas boiler can be arranged to provide for the whole steam requirement of the ship even at times when the main engine is at reduced power or is shut down. To enable this to be done the exhaust gas boiler must be provided with its own drum and circulating pump, no other boiler being provided unless a small domestic type oil fired unit is required. In addition, when the heat available in the exhaust gas is insufficient, arrangements are made for adding energy to the system by means of supplementary in-duct firing up-stream of the exhaust gas boiler. When the main engine is shut down steam can be generated by firing oil or gas in the duct up-stream of the exhaust gas boiler, the gas temperature and flow being made similar to that available from the main engine by the use of sufficient excess forced draught air and gas recirculation, Fig. 5. Arrangements of this sort should make steam power available for auxiliary purposes in motor ships or gas turbine ships which are of a size and type not requiring otherwise use of an oil fired boiler. Thus the advantages, in terms of reduced operating costs, of using exhaust heat are obtained with minimal capital expenditure.

OPERATION

One of the peculiarities of the operation of auxiliary boiler plant is the relatively large amount of time during which the boiler may be shut down. This is a period when the plant must not be forgotten because in spite of not being used it can still deteriorate. The boiler will normally be on stand-by ready for a sudden call for steam and so it must be

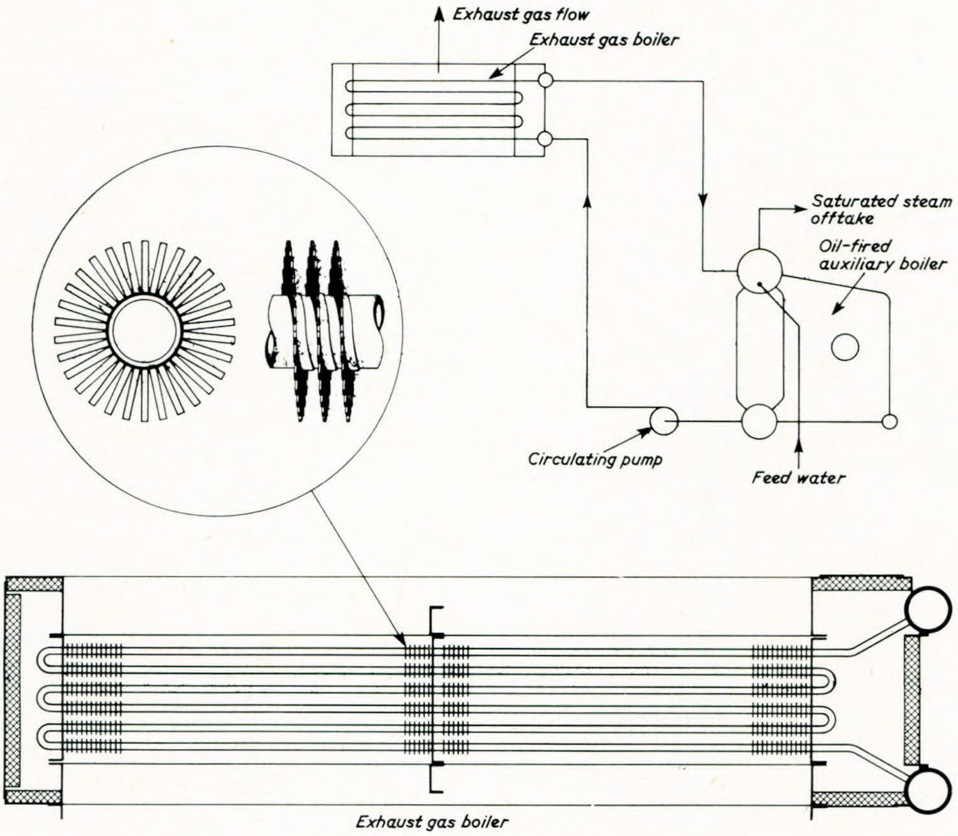

FIG. 3—*Exhaust gas boiler*

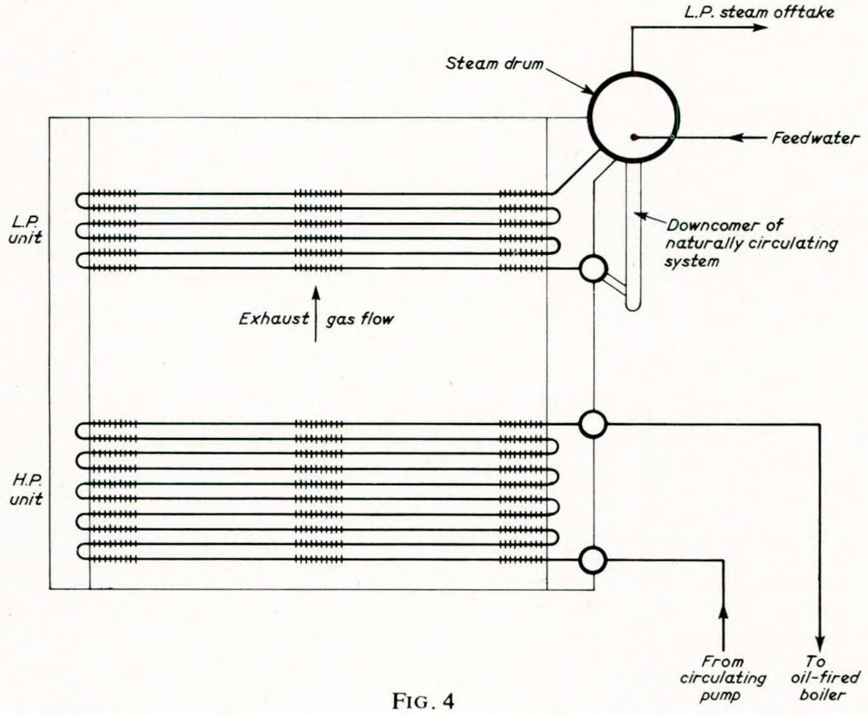

FIG. 4

stored wet. If, however, long periods of inactivity are assured then dry storage can be contemplated when the boiler is emptied, cleaned and dried internally and closed up with silica gel inside. When storing wet the boiler water conditions must be checked and stabilized before shutting down and the water level raised as high as possible in the glass whilst the firing rate is slowly reduced. When the fires have been extinguished and the pressure has fallen, but before cooling encourages formation of a vacuum, the boiler is slowly filled until completely full and a pressure of 0·7 bar (10 lbf/in^2) is obtained. The water used for the filling operation should be properly conditioned as regards alkalinity and oxygen content. After closing the feed check valve the boiler is inspected for leakage and the water content checked for alkalinity. Any loss of alkalinity revealed by tests at any time during the wet storage period should be made good by injecting a dilute solution of caustic soda through the chemical dosing connexion.

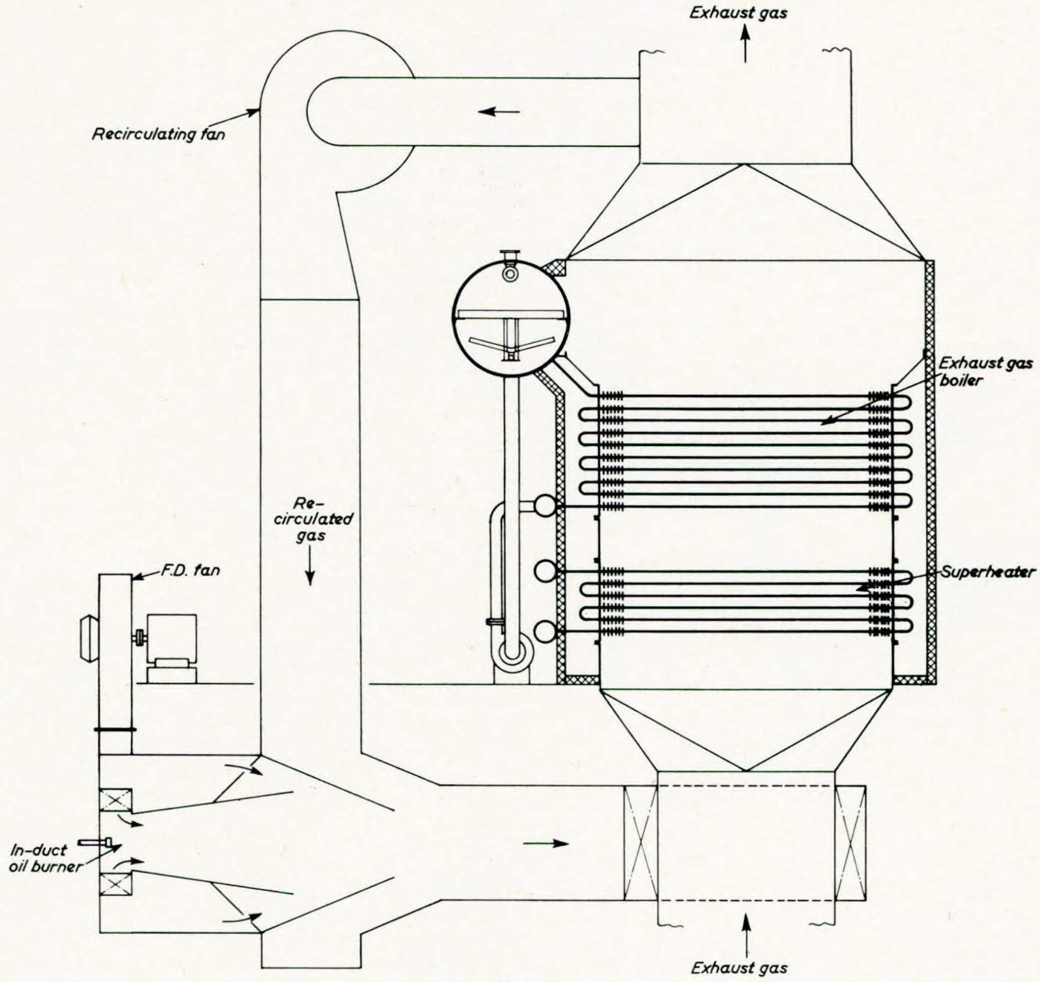

FIG. 5

Intermittent steaming of the type often undertaken with auxiliary boilers greatly increases the possibility of corrosion, and boilers used in this manner should be opened up for inspection more frequently than boilers engaged in continual steaming duties. External surfaces are especially prone to damage as a result of changes in climatic conditions, and some form of heating in the furnace may be advisable.

These problems can be alleviated if not eliminated by continuing to heat the boiler. In many circumstances sufficient steam would be available from another source, such as an exhaust gas boiler, to supply a simmering coil. Of course, circulation of the exhaust gas boiler from a shut down oil fired boiler would afford the latter similar protection. Simmering coils have been quite widely used however and it is found possible to keep a positive pressure in the drum which eliminates all risk of air ingress and the gas sides are kept warm and dry.

Even more important is the advantage gained from simmering coils which enables the boiler to be put onto the line at full pressure much more quickly than if raising steam from cold. In some circumstances the importance of this can be paramount. An emergency boiler on a steam ship may be required at a minute's notice to provide emergency steerage way to a ship where the main steam system is inoperative. The greatest possible degree of safety can be achieved in these cases, since a source of high pressure steam is available from the main boiler which, when applied to a suitable simmering coil, can enable the emergency boiler to be

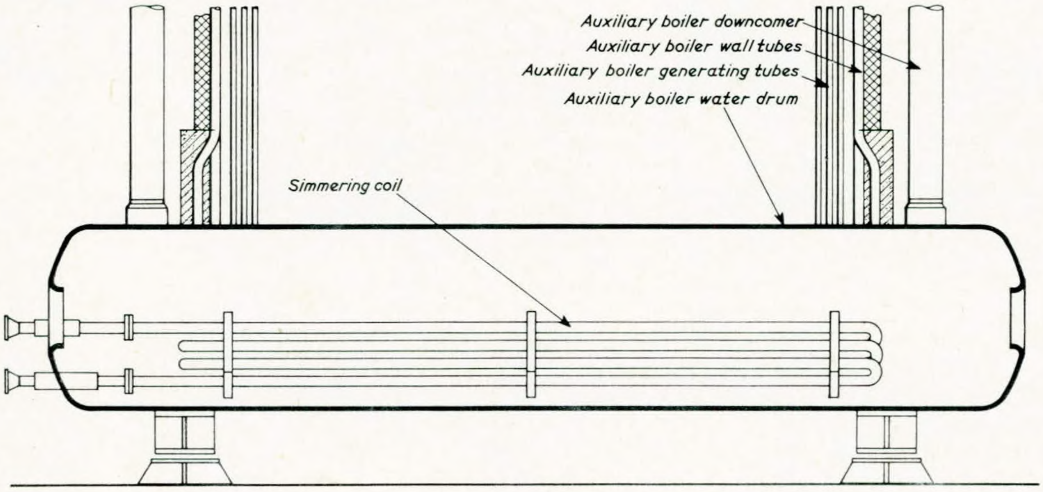

FIG. 6

continuously simmered at a substantial pressure whilst the vessel is in close waters. An example of this is an emergency boiler designed to produce 70 t/h at 61 bar, 380°C, when fired with oil, Fig. 6. A simmering coil in the water drum with a heating surface of 7 m^2 when supplied with steam at 62 bar, 513°C from the main boiler, enables the emergency boiler to be simmered at 46 bar. At this pressure a sudden demand for emergency steam can be met and by firing the boiler with oil at 2580 kg/h, the pressure can be raised to 62 bar in 9 minutes, whilst providing meanwhile steam at the rate of 16 t/h to the main engine. Once up to pressure the full output of 70 t/h is available. The simmering coil is arranged in the water drum of the boiler using thermally sleeved nozzles of the air cooled type fitted in the drum end. For retro fit purposes a special manhole door containing the necessary nozzles can be supplied.

The manifold uses of auxiliary steam at sea and the domination of the water tube boiler at outputs above 20 t/h and pressures above 17·5 bar has focused attention on the subject of feed and boiler water treatment. When emergency boilers operate at the same pressure as the main boiler then treatment practices are the same for both, and there is no difficulty because the operators are trained to recognize the importance of maintaining good conditions. On motor ships however, where lower pressures are frequently used, standards of quality are less severe and treatment procedures are less onerous for the operators to apply. In these cases steam pressures seldom exceed 31·5 bar and feed cycles are basic. A comparison of British standard recommendations for water tube boilers up to 17·5 bar and from 17·5 bar to 31·5 bar are given in Table II, showing that only a small difference exists between these requirements and there should be no difficulty in maintaining good conditions with reasonable care.

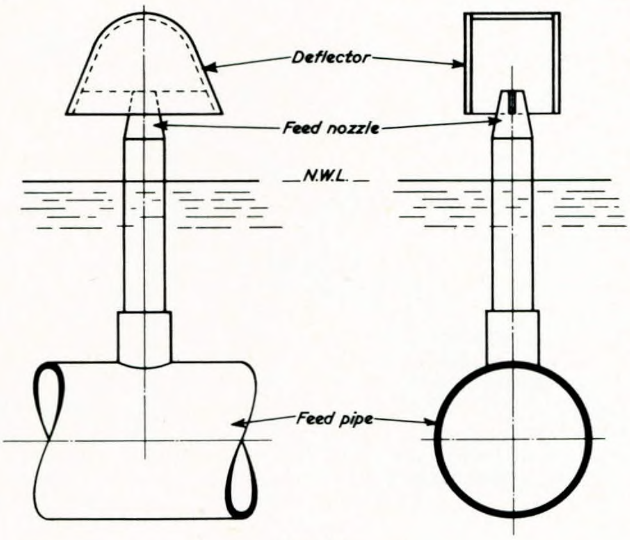

FIG. 7

There is no doubt that particulate contamination and oil should be prevented from reaching the boilers, and so full flow feed filtration is recommended. A requirement which applies more strictly to the higher of the above pressure ranges is the limitation of dissolved oxygen in the feed water to a maximum of 0·06 ppm and a recommendation to control pH of the condensate to between 8·5 and 9·0. This leads to the general question of whether a deaerator should be incorporated in marine auxiliary systems. From a narrow consideration of the boiler itself, a deaerator would be recommended particularly for the higher pressure range, but it has to be recognized that overall economics of the situation need be considered. In addition simple provision of the deaerator does not guarantee minimal oxygen in the feed, as the deaerator itself is an additional piece of equipment which needs to be maintained in good working order. On balance it seems that the deaerator may be dispensed with if the consequences of its absence are recognized and a few simple precautions taken.

When a boiler is fed with aerated feed water, oxygen is driven out of solution when the feed is first heated and if this should happen while the feed is inside tubes, these tubes will suffer severe oxygen attack. If, however, the feed is first heated by contact with the hot contents of the steam drum, most of the dissolved oxygen will be driven off and leave the drum with the steam. Residual oxygen can be mopped up by the application in the water treatment chemicals of appropriate quantities of sodium sulphite. Sodium sulphite adds to the dissolved solids content of the boiler water and so for higher pressures a volatile treatment such as hydrazine may be preferred, although there are difficulties in maintaining a sufficient reserve of this in the boiler water. The separation of oxygen from the feed water in the drum can be encouraged and protection for the boiler increased by admitting the feed in such a way that it comes into more intimate contact with the steam so achieving a maximum deaeration effect. The feed nozzle illustrated in Fig. 7 achieves this end and is offered for auxiliary plant where aerated feed is anticipated.

Having effectively disposed of oxygen as far as the boiler is concerned, it is necessary to remember that it is still in the system and if no further steps are taken severe corrosion of steam and condensate systems will occur. Eventually the results of this will be manifest by boiler difficulties as the corrosion products eventually find their way there. Feed filtration has already been mentioned in this connexion, but it is considered necessary to recommend more positive steps by means of amine treatment to correct pH and protect steam and condensate systems from the effects of corrosive media.

Generally speaking, where regular testing and dosing of boiler water is sensibly carried out, performance of auxiliary water-tube boilers is good and it is believed that there can be very few cases where the additional expense of double pressure or double evaporation boilers is justified. Working on the Smidt-Hartmann principle, the unit consists of a closed primary high pressure system, similar to any of the auxiliary boilers already described, coupled with a low pressure steam/steam generator or re-boiler. Steam from the high pressure boiler drum passes in closed circuit through the re-boiler tubes where it is condensed, returning by gravity to the HP boiler. The initial charge of high quality water in the latter, working at, say 48·3 bar (700 lbf/in^2) is diluted only by occasional makeup to replace losses by leakage. The steam generated in the LP vessel of the re-boiler supplies the auxiliary plant and the LP section of the re-boiler is just as prone to oxygen attack as a direct fired unit. The infrequent attention required by the primary unit is also conductive to a relaxation in operating standards, and many cases have been reported of serious damage due to lighting up with insufficient primary water.

The adoption of simple precautions and operating techniques mentioned in the foregoing, enables the motor ship owner and operator to contemplate a wider adoption of steam services aboard ship without risk of serious maintenance difficulties. In these times of high fuel cost, the provision of

TABLE II — RECOMMENDED BOILER WATER CHARACTERISTICS BS. 1170

	Alkalinity To phenolphthalein ppm Ca CO$_3$	Chlorides (Max) ppm Ca CO$_3$	Dissolved Solid (Max) ppm	E.D.T.A. hardness (Max) ppm Ca CO$_3$	Sulphite Excess ppm Na$_2$SO$_3$	Phosphate Reserve ppm PO$_4$
WT Boilers Up to 17·5 bar	150–300	300	1500	5	50–100	30–70
WT Boilers 17·5 to 31·5 bar	150–300	150	1000	5	50–100	30–70

exhaust gas heat recovery and electrical generation from steam must receive close scrutiny. That this can be done in ships not requiring large oil fired auxiliary boilers adds to the attraction of the principle. Also the availability of small light weight water tube auxiliary units for domestic style duties and larger water tube units for cargo pumping and tank cleaning on tankers, completes the comprehensive coverage afforded by steam as a seagoing energy source. Safe and economic operation is enhanced by automatic supervisory and control equipment, the use of which for auxiliary plant is becoming widespread.

COMBUSTION EQUIPMENT

Often the specification of combustion equipment for an auxiliary boiler leaves much to the manufacturer's discretion. Within the limits of competitive tendering he must supply all equipment necessary to deal with a wide range of operating conditions, which may in practice vary unpredictably through circumstances outside his control.

One auxiliary boiler was installed with automatic sequencing burners to satisfy anticipated wide load range operation. The main load provided by cargo pumps was capable of rapid changes because the pumps and associated valves were operated by push button. During trials inadequacies were found in pump capacity, and these were minimized by using main pumps to below the normal stripping level. Frequent loss of pump suction was corrected by closing the discharge valves causing more severe fluctuations in steam demand than originally intended. These load cycle times were shorter than the time required to cycle a burner in and out and the burner management could not cope. The boiler equipment was criticized for being unable to respond. This criticism was not valid as no indication of such severe load change rate was given at any time before the trials.

Experience dictates that the combustion equipment for auxiliary boilers must be capable of satisfying the following conditions:

1) a reasonably fluctuating steam demand under pumping conditions;
2) minimum boiler output when backing up a waste heat boiler;
3) acceptable combustion at maximum boiler load;
4) O_2 content of less than 4 per cent in the funnel gases at the minimum boiler load where an inert gas system is installed.

The range of steam atomizing oil burners now available can give a turn down exceeding 15 : 1, with good combustion over a wide range, when fired into furnaces of good geometry, which makes it possible to meet quite onerous specifications. The problems in oil firing are therefore usually associated with the reliability of equipment. As with the boiler itself, the burners must require a minimum of easily performed maintenance.

Consideration of the burner components will show some factors affecting design. Fig. 8.

1) *Air Register*

Function

To admit air, and establish a flow pattern that promotes mixing of air and oil

Associated Faults

i) Seizure of sleeve operating gear due to lack of lubrication and deposits on the sliding rods. Prevented by the use of gaiters, or by arranging that the rods be outside the windbox when the burner is firing.

ii) Relative movement between the inner and outer casings of the windbox causing misalignment of slides and operating rods. Separation of parts attached to the inner and outer casing respectively can prevent this. A means to adjust oil atomizer concentricity within the throat should be provided.

2) *Oil Atomizer*

Function

To divide the fuel oil into small droplets.

Associated Faults

a) Where atomization is solely dependant on pressure energy the performance is impaired by damage to the sharp edged orifice of the tips, during routine cleaning. Twin fluid atomization reduces the importance of sharp edged orifices. Single piece screw-on tips are more robust and easier to clean.

b) Failure of joints in atomizer as a result of frequent dismantling. Using twin fluid atomizers the period between cleanings is greatly extended.

3) *Burner Throat*

Function

To aid mixing of oil and air and to control recirculation to develop flame shape. It is normally a static part with an outlet cone sometimes composed of refractory but frequently made of heat resisting metal (50/50 chrome nickel).

Associated Faults

Spalling of the refractory and continual renewal required. Metal throats have given satisfactory service with no requirements for renewal.

4) *Stabilizer (Swirler)*

Function

To produce the local environment for creating the ignition front of the flame within the general flow pattern set by the register and throat. A correctly designed swirler stabilizes the flame over the whole output range, providing that only reasonable excursions occur in the air fuel ratio.

Associated Faults

Although the deposition of carbon on the blades does not normally interfere with the air flow pattern, adequate

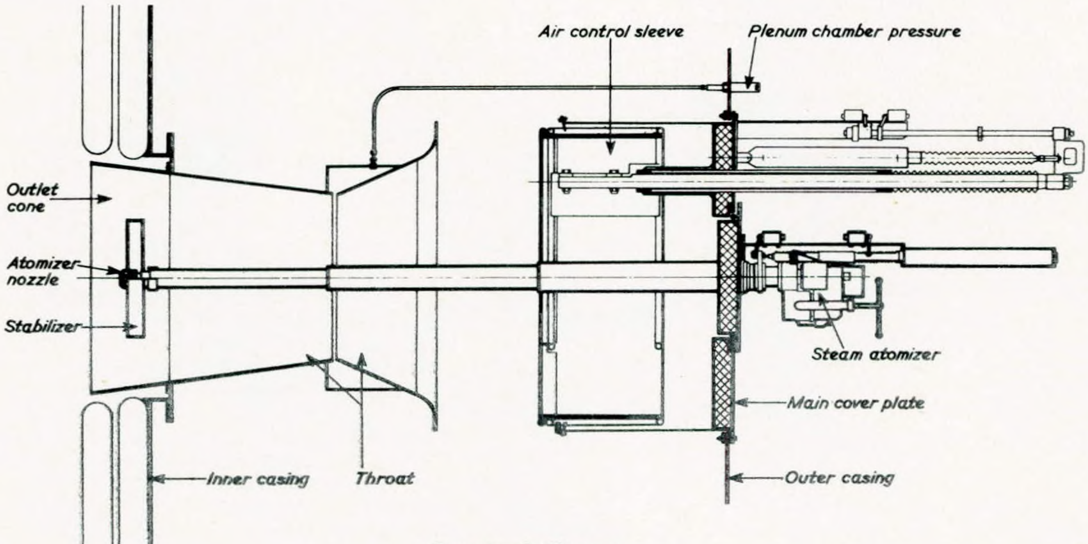

FIG. 8—*Oil burner*

provision for adjusting the relationships between tip, swirler and throat can reduce this hazard. Improvements in design have resulted in swirlers which are not prone to this fault.

Register, throat, stabilizer and atomizer require selection for compatibility of characteristics over the operating range to give the required flame shape and quality.

MANAGEMENT OF BURNERS

The ability to start and stop burners as necessary in a manner satisfying the safety requirements of both personnel and plant comes under the control of the burner management system. This is distinct from the control of air fuel ratio, pressure and feed flow, which are discussed later.

With manually operated burners the management system can be rudimentary. The provision of a flame monitor allows a trial for ignition period to ensure that a minimum of oil is injected into the furnace unless ignition takes place. Semi or fully automatic burners incorporate systems which require that an extensive study of the plant at all load levels be made, to arrive at a satisfactory operating philosophy.

The extent to which a plant may be manually operated and monitored affects the degree and therefore complexity of automatic burner management, giving increased potential for reliability. Extensive use of automation, however, removes the need for manual intervention and ensures correct operation of plant with a minimum of staff. The owner must therefore optimize the degree of automation to suit the number and quality of staff available.

Because it is the burners that provide the majority of input and output signals it follows logically that the management system provided should be an integral part of the burner system. The burner manufacturer knows the limitations of his equipment. As the majority of failures stem from mechanical faults in the burner, valves and limit switches, account of these can be taken in the system design to prevent unnecessary shut down of the boiler. Most systems are based on pneumatic operation with electrical control.

The main functions of boiler management are listed below.

SAFE START UP

1) To provide furnace pre-purge before attempting ignition. The forced draught fan vanes or dampers should be automatically opened sufficiently wide to ensure an adequate flow of clean air to dilute and disperse combustibles. Turbulence at the interface between air and combustibles resulting in local excursions through the explosive range should be avoided. Experiments indicate that three minutes at 25 per cent of maximum air flow is suitable for the configuration of a normal marine furnace.

2) To ensure that all permissives for operating the boiler safely are met.

3) To establish low fire settings following furnace pre-purge, ensuring that air and oil flows are correct for light off.

4) To provide a "trial for ignition" period, by cancelling for a short time the flame out signal of the flame monitor. During this period sufficient oil must flow from the burner tip, and the igniter come into contact with oil spray. The period must be such that, if ignition fails to take place, the amount of oil injected into furnace is insufficient for a concentration exceeding the explosive limit. One survey authority gives this as 1 to 2 kg of oil.

SAFETY SHUT DOWN

Boiler trips fall into two categories.

i) Those resulting from the failure of functions normally maintained during running of a plant.

ii) Those resulting from abnormal conditions subsequent to start up, continuation of which will create a hazardous condition.

Where possible primary signals should be used for tripping. Secondary signals, (e.g. fan running circuit for combustion air available) are inferential and their dependence on other factors may cause nuisance trips.

Example of Trips

a) Combustion Air

Failure of draught fans are rare and the combustion control systems can frequently limit fuel flow to available air flow. However, a "loss of combustion air" trip should be incorporated. An inferential signal from auxiliary contacts in fan motor switch gear is usually used. Switches operated by windbox pressure or air flow can be unreliable due to loss of sensitivity at low flows.

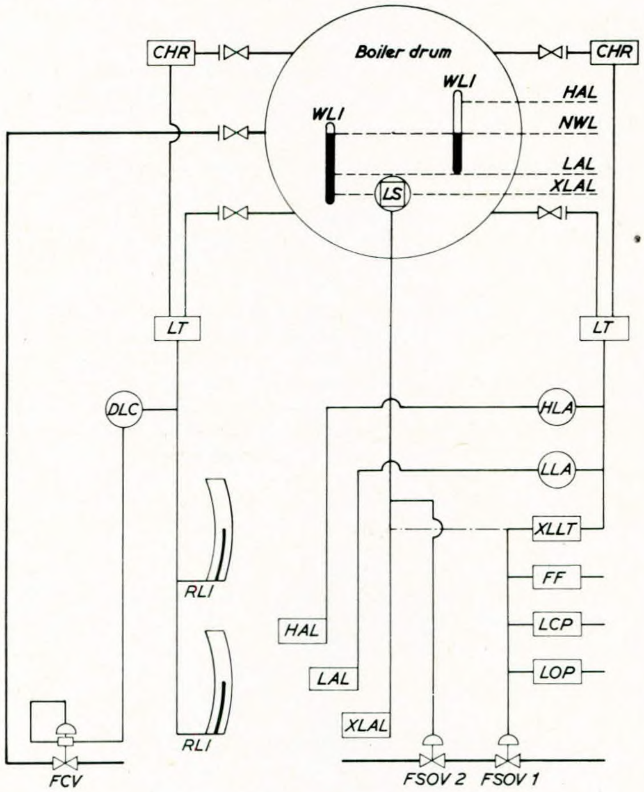

LT	Level transmitter	
WLI	Water level indicator	
RLI	Remote level indicator	
CHR	Constant head reservoir	
HLA	Pressure switch high level alarm	
LLA	Pressure switch low level alarm	
XLLT	Pressure switch extreme low level trip	
LS	Magnetic level switch	
LCP	Low combustion air pressure	
LOP	Low fuel oil pressure	
FF	Flame failure	
DLC	Drum level controller	
FCV	Feed control valve	
FSOV1	Fuel shut-off valve	
FSOV2	Fuel shut-off valve	
NWL	Normal water level	Distance from NWL
HAL	High level alarm	150 mm
LAL	Low level alarm	220 mm
XLAL	Extreme low level alarm	290 mm

FIG. 9—*Water level alarm and shut down*

b) Drum Water Level

Trips are set before the level would cause failure of water circulation within the boiler or priming that might damage turbine drives. Alarms should be given before these trips operate, so that corrective action may be taken to avoid shut down. Survey authorities require trip settings to be within the range of sight glasses. It is also required that the signals for low level trip be obtained from two independent sources. A typical arrangement acceptable to survey authorities is shown in Fig. 9.

Self contained units, consisting of a float operated valve which at low level allowed boiler steam pressure to pass to the diaphragm of a fuel shut off valve and a whistle, became obsolete due to maintenance problems. Switches operated by pneumatic signals from a level transmitter at pressures corresponding to alarm or trip levels are now used, often in conjunction with a float operated magnetic switch.

Boiler tube failure from loss of water is frequently due to the practice of manually hand jacking the fuel shut off valve to stop nuisance shut downs from other sources (low combustion air, spurious flame failure). To overcome this, the provision of an additional fuel shut off valve without handjack, operated solely by low water level is advocated.

A time delay is frequently fitted to level trips to prevent nuisance shut downs in a heavy sea. The delay must be set with reference to the distance between the lowest visible water level and the positions of circulating pipes in the boiler, when the vessel is rolling or pitching.

FLAME FAILURE

The reliability of a burner management system is very dependent on effective flame monitoring. In addition to the primary object of detecting flame out, the monitor should indicate the quality of flame and detachment of flame from the atomizer nozzle. (See Fig. 10).

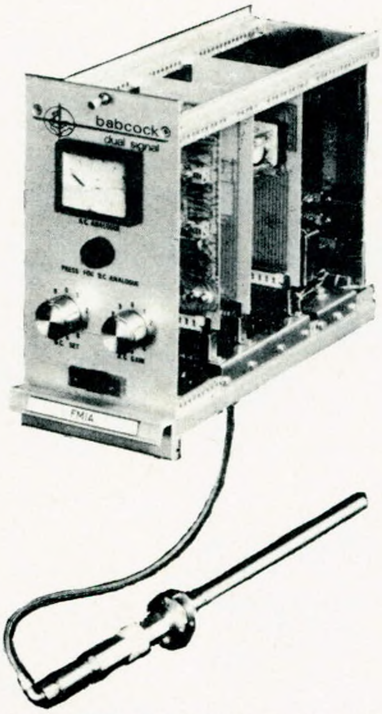

FIG. 10—*Flame monitor with control module*

Many types of flame monitor have been developed including temperature sensitive and acoustic based methods, but the optical device is almost universally accepted. These can distinguish between adjacent burners over a load range of 15 : 1, and between flame and hot refractory or reflective mediums in the furnace.

A unit has been developed which uses the low amplitude high frequency (300 hertz) at the root of the flame. It is first necessary to present a d.c. signal associated with a given level of brightness to the amplifier, so that the superimposed a.c. ripple voltage be passed to the a.c. amplifier (see Fig. 11). Intelligent use of the a.c. and d.c. analogue enables fouling of the tip or any other trends towards deterioration of combustion to be detected. A "cell dim" signal gives advance warning of fall off in brightness due to sighting head requiring cleaning. The standard head uses a silicon type photo cell as the primary sensing device. This is suitable for oil flames. The use of filters or alternatively zinc sulphide or caesium antimony cells enable the monitor to be used with a wide range of fuels and even combination of fuels.

The optimum position for sighting the flame is decided by experience. Good results have been achieved by viewing from the furnace side wall. This has the added advantage of removing the monitor from the congested area of the burner cover plate.

An additional safeguard against oil spillage in the furnace is provided if, in addition to closing individual burner valves on flame out, the main fuel shut off valve is closed when flame out is signalled on all burners simultaneously.

FUEL OIL

A loop can be provided with the combustion control equipment to keep oil pressure above the minimum required for maintaining the burner alight. A pressure switch can be set to operate below the maintained pressure and close the fuel oil shut off valve to prevent discharge of fuel if pumps are restored after stoppage, or fuel line valves opened after inadvertent closure.

BURNER OPERATION

In addition to monitoring, alarm and tripping, the burner management must provide the digital control for atomizer and register functions, e.g. operating sequentially the igniter, air sleeve, fuel valve, atomizing steam and purge valves. Elimination of as many functions as possible reduces maintenance and possibility of failure. Fixed atomizers not requiring retraction (eliminating necessity for flexible hoses)

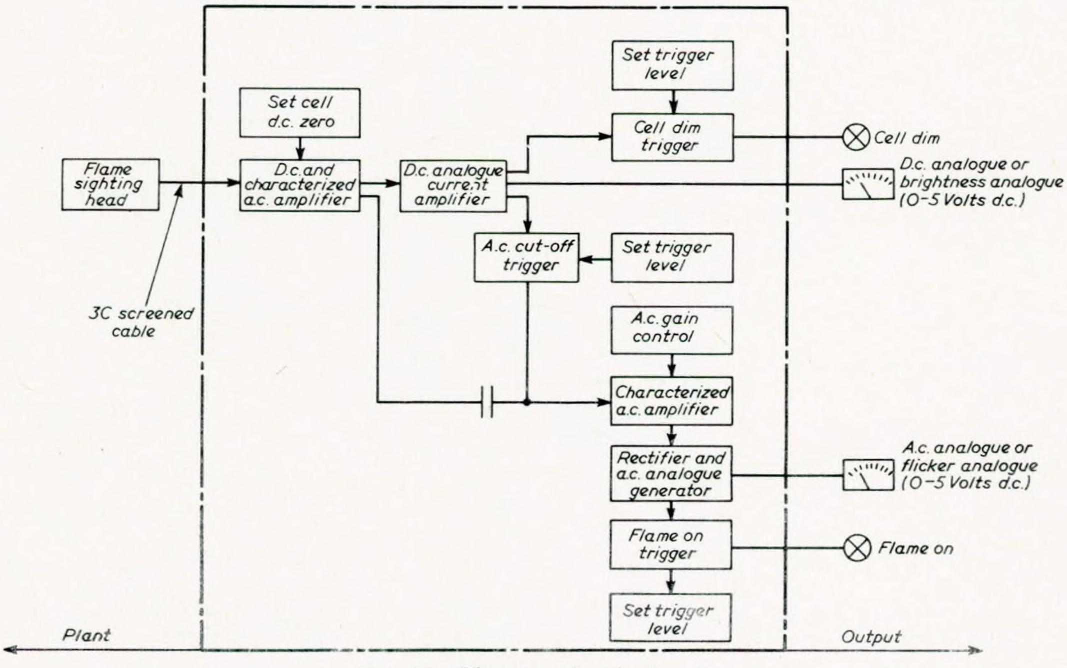

FIG. 11—*Flame monitor logic unit*

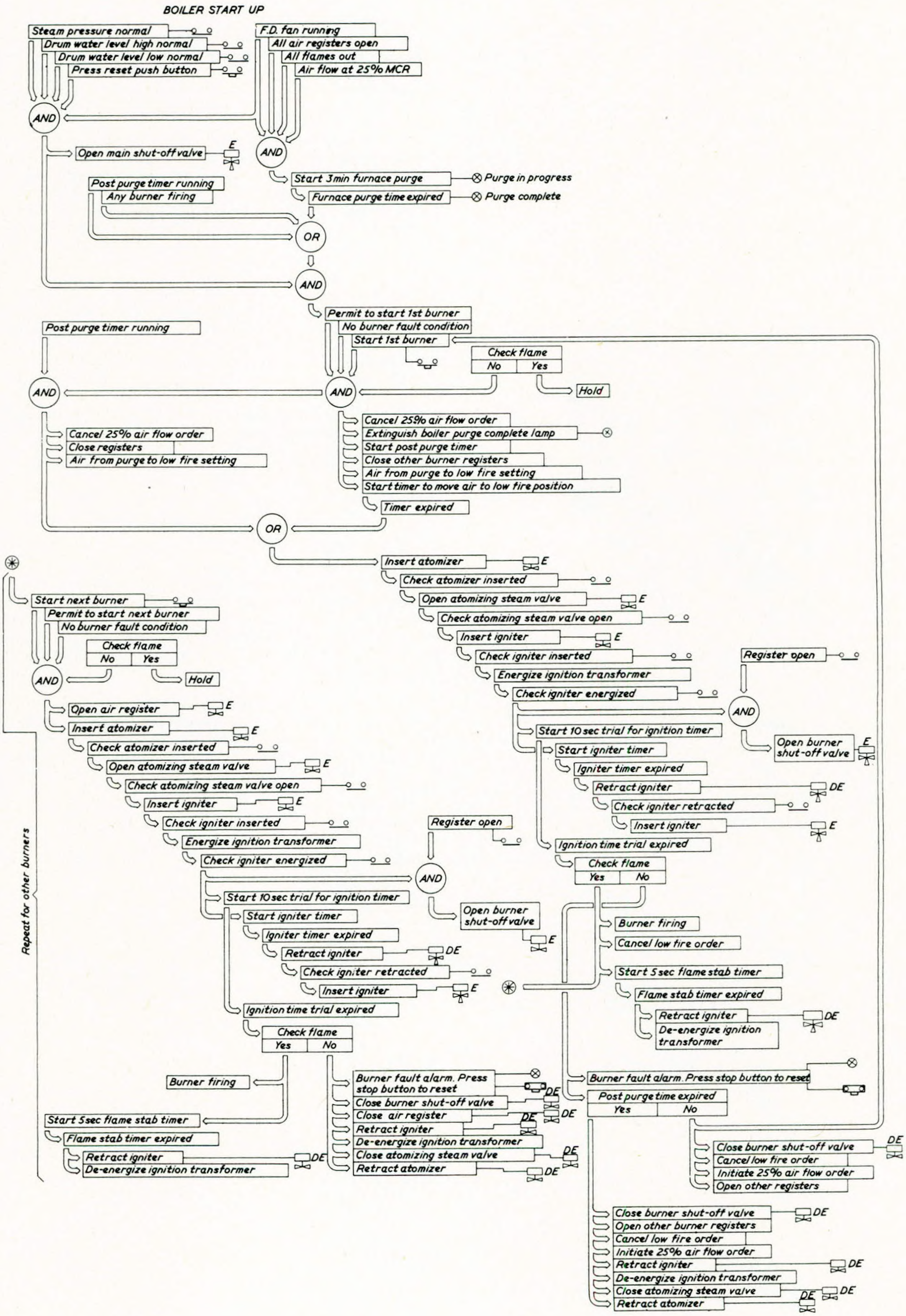

FIG. 12—*Typical boiler management system*

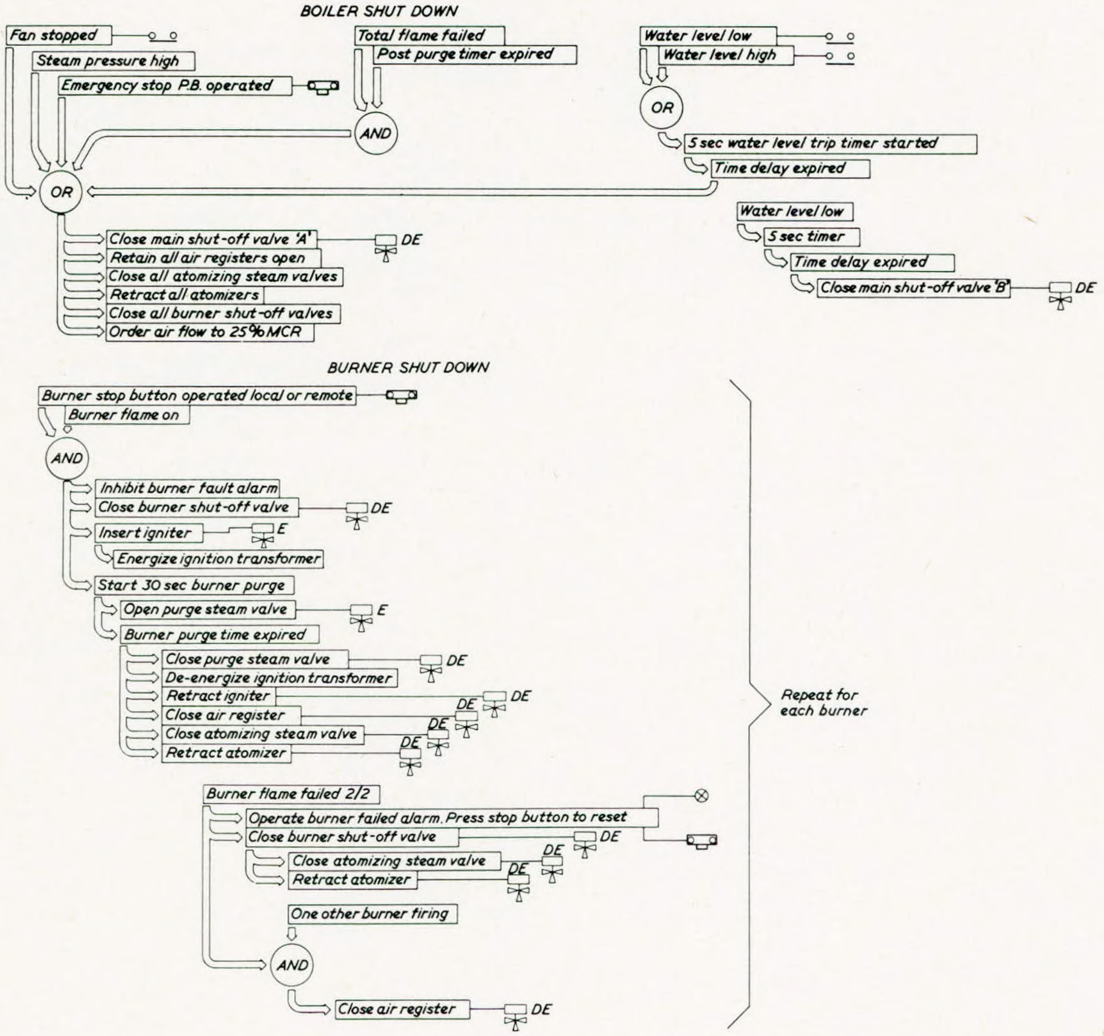

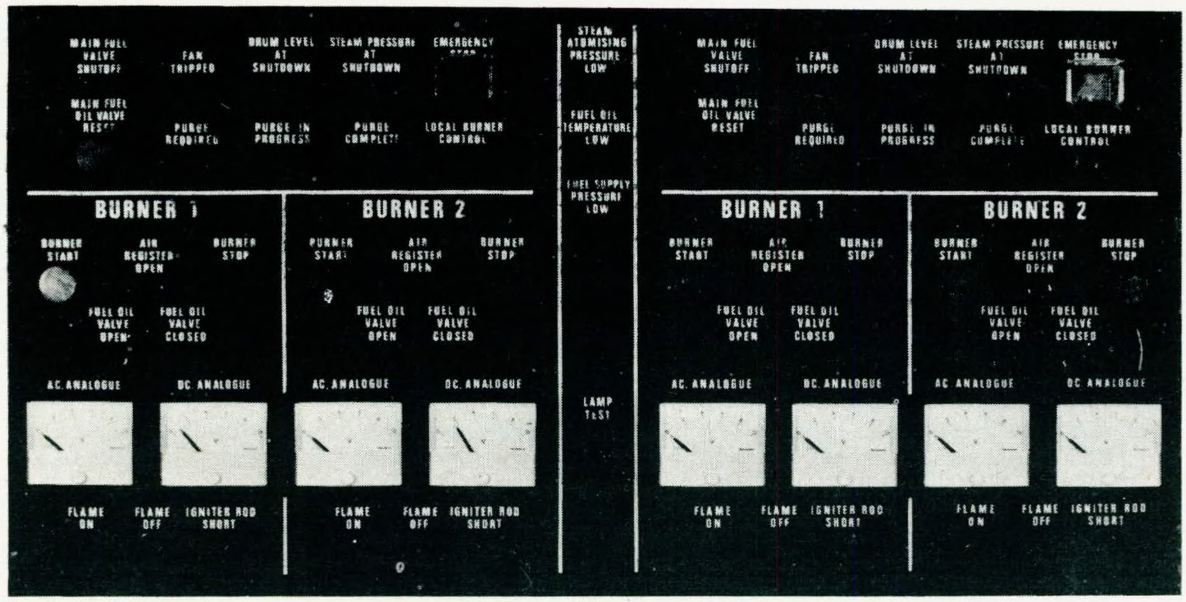

FIG. 13—*Remote control desk plaque*

are frequently fitted. It has been found that with steam cooling many atomizers can remain in the advanced position without steam purging of oil ports. Manual steam purging is only carried out before removing atomizer from register. Safety is achieved with fuel and steam valves which close automatically when the atomizer is removed.

Manifolded solenoid operated pneumatic control valves provide a neat arrangement when located inside the local control panel, especially when double diaphragm cartridges are used. A key operated selector can be used to operate burners pneumatically in the event of failure of the electrical management system.

RELIABILITY AND MAINTENANCE

The importance of reliability where safety of life is involved cannot be overstressed. Enforced plant outage is expensive, and can jeopardize the whole function of the ship as a carrier of cargo.

Many systems have been designed around electromechanical relays. When these were of the highest quality service was generally reliable. However, oxidization of contacts and general dirt and dust could prevent proper operation, and residual d.c. cause armature sticking. Narrow reset differentials could cause rapid erratic operation of relays with consequent arcing. The bulkiness of relay systems required large cabinets. However, many engineers found reassurance in seeing mechanical movement result from signal initiation, and on becoming familiar with the relay positions were able to detect faulty sequences by inspection.

Some reluctance was met in changing to more sophisticated solid state electronic systems as no visual evidence of reliability could be offered. Early failures were due to components being positioned in unsuitable environments. Excessive miniaturization contributed to high temperatures in enclosures, erratic performances resulted from line transients and spurious signals from earthing systems. Operating voltages were sometimes not high enough to operate external switching against additional contact resistances.

It is possible to design out these shortcomings especially if reliable components derived from aero space research are used. A reliable system will have complete isolation of the electronic system from all external circuits, eliminating faults from line transients and earthing arrangements. Live side switching precludes the chance of spurious operation. The use of 50 volt d.c. is adequate to break down contact resistance. If line transients can be predicted these can be filtered and stabilization provided for the complete system, alternatively integral power supplies with built in stabilization can be supplied for each section.

Accessability of components and facility in changing cards must be considered to assist in fault finding. In a correctly designed system all input and output signals can be continuously monitored and a display provided to indicate how far the sequence has advanced.

BASIC REQUIREMENTS FOR CONTROL SYSTEMS

For the control of auxiliary boilers shipyards normally impose four main criteria:

1) low cost of instruments;
2) simple and low cost installation;
3) speedy and reliable commissioning;
4) classification societies approval.

Shipowners impose additional criteria:

i) reliability under all conditions of operation;
ii) displays and manual controls which are simple to understand and easy to operate;
iii) systems designed for safe operation under all failure conditions liable to occur;
iv) easy fault finding and maintenance;
v) worldwide service back-up.

Until the last few years pneumatic systems have provided the best compromise. Most of these pneumatic systems have given excellent reliable service, and are frequently preferred by ships officers to their modern electronic equivalent. They are however, relatively expensive to install and are not so simple to commission or to maintain as a modern electronic system. When correctly installed they can be extremely reliable, provided that they are supplied with clean dry air and that untrained personnel are not permitted to attempt internal adjustments.

The new generation of solid state electronic instrumentation has a reliability of an even higher order, and when incorporated into the packaged control systems which have been developed provide an almost ideal answer to the criteria listed above.

Because there is a wealth of published information on pneumatic systems the following will concentrate upon the electronic approach and will attempt to show how it meets these criteria.

COST

Because auxiliary boilers have relatively low usage there is a natural temptation to install the cheapest equipment, and pneumatic instrumentation still has the lowest initial price. Instrument costs are however only a small fraction of the total price of a control system as delivered to a shipowner. Instruments must be mounted on the plant, packaged into cabinets and control consoles, interconnecting piping and wiring installed, checked out and commissioned. If these total costs are assessed, rather than instrumentation alone, the electronic system provides the most competitive solution.

Individuals not directly involved with the instrument industry are frequently surprised at what they believe to be the high cost of electronic control hardware, and refer to the low price of domestic electronic equipment. Much of the cost of electronic instrumentation is due to the exacting requirements for quality assurance, including the need to select and "burn-in" components, and to the need for close control of all stages of assembly in order to eliminate defects such as "dry" joints which can cause trouble later in the life of the equipment and which can be very difficult to locate. The environmental specifications for marine instrumentation also necessitate the use of components of a different class to those used in domestic products. Equipment not manufactured to the appropriate quality standards, or not employing components of the quality required to meet the standards laid down by the classification societies is likely to prove unreliable and dangerous in service.

INSTALLATION

The increasing cost of installation has resulted in manufacturers of electronic control systems introducing packaged systems, thereby reducing to a minimum the cost of installation wiring and hence the time required for installation.

The need for packaged marine systems was first recognized by the shipyards, some of whom have designed equipment to meet their own specific requirements. Instrument manufacturers have also recognized this need but have tended to design their packaged systems using existing modular instruments, which can, of course, be used universally in other automation schemes, such as the control of main propulsion turbines, diesels, and auxiliary machinery. From the shipowners point of view this approach is advantageous since it reduces spares and training problems.

Where systems have been designed by shipyards the whole of the electronic circuitry and the operator displays have generally been packaged into one relatively large box for mounting directly into the control console. Instrument manufacturers have introduced systems in which the operator panel only is mounted into the control console, the electronic modules being contained in a separate free standing cabinet. This approach has the advantage that the size of the operator's panel is minimized. It also enables fault finding and/or maintenance routines to be carried out without interfering with the operator, and the cabinet may normally be kept locked to avoid tampering by unauthorized personnel. With this approach nothing is lost in respect of ease of installation, since all connexions between the operator's panel and the electronic cabinet are by means of pre-formed cables with plug and socket connectors.

An example of a packaged system by an instrument company is illustrated in Fig. 14.

COMMISSIONING

Excessive time spent on commissioning can be expensive to the shipyard. It is therefore essential that the control equipment is completely checked out before bringing the boiler into use, so that the actual commissioning procedure

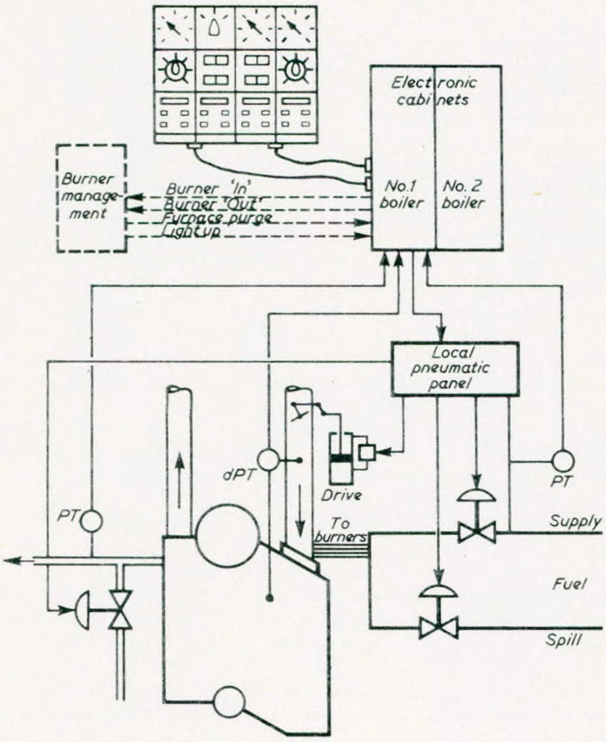

FIG. 14

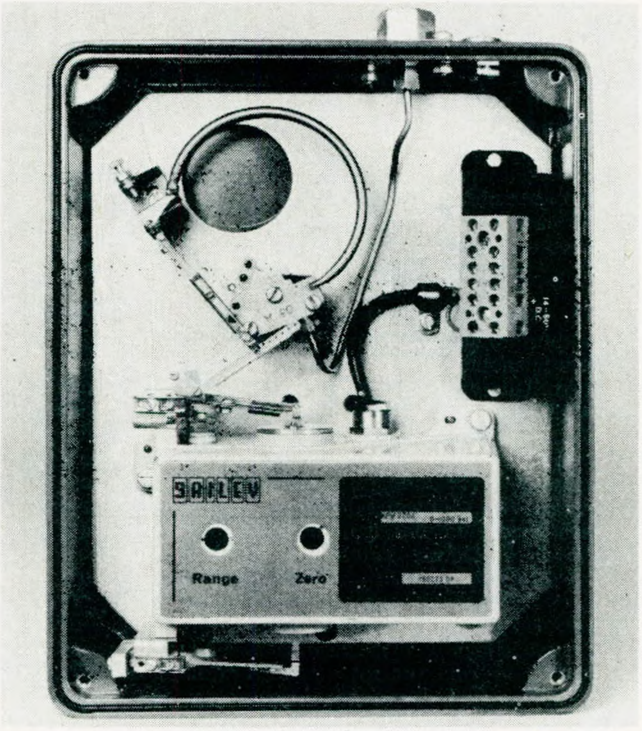

FIG. 15

only involves final adjustments of fuel/air ratios, controller settings, etc.

Although some attempt has been made with pneumatic systems to check out the systems in the factory, this can be done much more comprehensively with electronics systems. In addition, the packaged electronic systems normally incorporate provision for testing the system on its own, even if the boiler is not available.

CLASSIFICATION SOCIETIES APPROVAL

While the advantages of type evaluation are clearly recognizable, this has in the past been an expensive luxury, due to the need to satisfy different technical specifications and the reluctance of classification societies to accept test results undertaken by other societies. It is to be hoped that with the acceptance of IEC 92-504, classification societies will bring their own specifications into line and that a universal type evaluation certificate will eventually result. This would substantially reduce the cost to manufacturers and make it more worth their while to submit their equipment for type approval. There is little doubt that the close scrutiny to which equipment is submitted during such evaluation eliminates many minor design faults which would otherwise occur in service.

With control systems made up from standard instruments, custom built to meet a particular shipyard or shipowners' requirements, the best that a manufacturer can do is to submit his range of instruments for type approval. With a packaged system the complete package can be submitted, ensuring that not only the instruments but the systems are evaluated.

Type approval is not essential to meet classification society requirements, but greatly facilitates the work of the shipyard in obtaining approval of the selected system.

RELIABILITY

Reliability can be assured by:

a) equipment designed to meet the environmental conditions which exist in ships' machinery spaces — this involves the careful selection of components and the design of modules to ensure that they operate under conditions of severe vibration, high temperature and humidity;
b) manufacture in a factory having an effective system of quality control;
c) type evaluation by the classification societies.

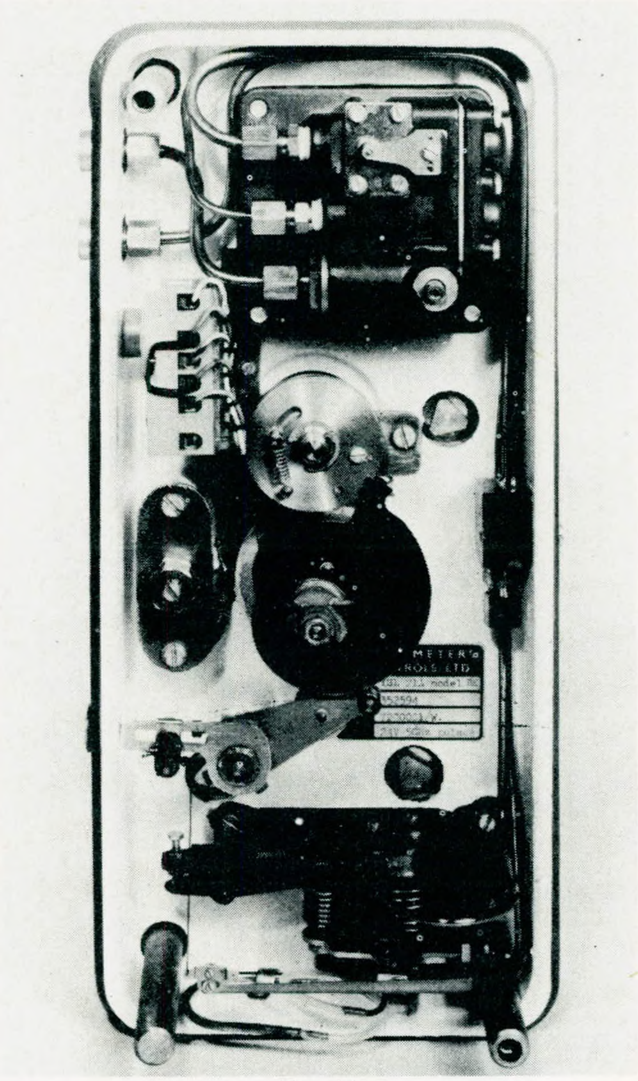

FIG. 16

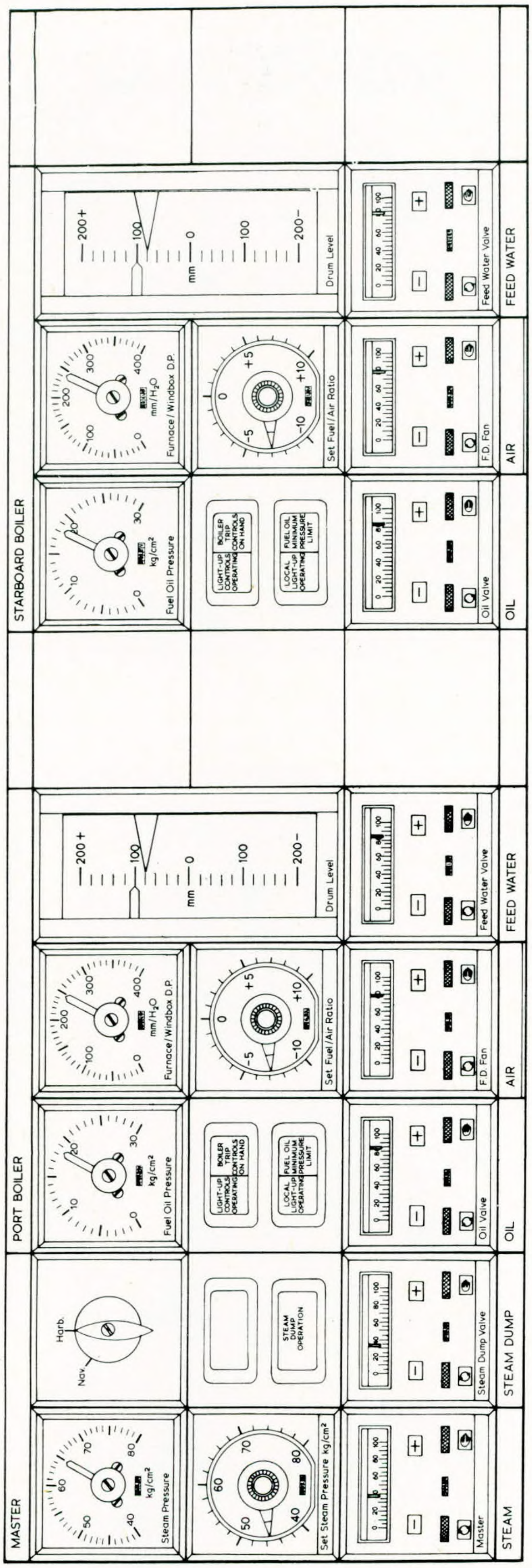

FIG. 17

From a manufacturer's point of view the exercise of quality control is somewhat easier with electronic equipment than with pneumatic or mechanical equipment, due to the sophisticated techniques and equipment developed in recent years for checking electronic equipment.

The reliability of the system, however, is dependent upon the transmitters, valve actuators, and damper power drives in addition to the electronic signal processing equipment. The selection of the correct transmitter for the application is particularly important, since the control system can only be as good as the measurements with which it is fed. Fig. 15 illustrates a typical modern transmitter of the inductive type, where the movement of the primary element (in this case pressure) is imparted to the ferrite core of a differential transformer. An encapsulated amplifier senses these inductive changes and produces a proportional 4 to 20 mA output signal. This type of transmitter has proved particularly reliable and has the advantage that the identical transmitting unit can be used with a number of different measuring elements. Transmitters of the capacitance type in which displacement of the sensing diaphragm changes the differential capacitance between the diaphragm and the capacitance plates have also proved very reliable, and some manufacturers now offer transmitters based upon strain gauge measurements. Whichever type is selected, it is important that they are not dependent upon parts which have significant movement or electrical contact.

Despite the progress which has been made in recent years with electrical valve and damper actuators, pneumatic actuators still provide the cheapest and most reliable solution to the problem of valve actuation. With an electronic system, electro-pneumatic converters are required to interface. Fig. 16 illustrates a typical pulse to pneumatic converter. The pulse output signals are fed to a stepping motor which drives the characterizing cam. The position of the cam is detected by the cam follower and a pneumatic signal generated which is proportional to the position of this cam follower. It will be seen that in the event of failure of the pulse output signal, the cam stays set and therefore the pneumatic output stays set.

DISPLAYS AND MANUAL CONTROLS

The value of manual controls which are simple to understand and easy to operate is particularly important to owners of multi-national fleets. Fig. 17 illustrates an operator's panel for a twin auxiliary boiler installation. DIN sized units 72 mm × 72 mm are employed, which leads to a very compact installation. The auto/manual stations employ push-button operation and the method of operation is made obvious by the use of symbols.

SAFE OPERATION

Many features may be incorporated in a packaged electronic system, which help to ensure safe operation. For example, the use of a pulse output signal from the controller means that the output is only live during a change in demand. Thus the following safety features are inherent:

1) bumpless transfer from manual to automatic control or from automatic to manual, without the necessity to balance the signals;
2) independent manual power supply — the power supply to the auto/manual station may be taken from a different source to that of the electronic controllers in order to ensure that manual control is still available in the event of failure of the power supply to the controller or failure of the controller itself;
3) fail set action on failure of electrical supply;
4) no integral wind-up can occur; with systems having an analogue output there may be a delayed response after the controller has reached limiting conditions — for example, when the steam pressure controller has reduced the fuel oil pressure to its minimum limit and there is then a sudden demand for increased output, some analogue systems do not respond immediately due to a phenomenon known as integral action wind-up — with pulse output the response is immediate.

It is also simple and convenient to include provision for monitoring the transmitter signals for excursion outside the normal 4 to 20 mA signal level. This helps to protect against the possibility of transmitter or transmission wiring failure which can have disastrous consequences.

FAULT FINDING

The importance of systems which do not require specialist maintenance cannot be over emphasized. For this reason it is modern practice to provide built-in test facilities which enable the performance of the system to be checked by an operator, and faulty modules diagnosed. Monitor modules may be provided which enable the control signals at various parts of the system to be checked without disturbing the process. Similarly, modules may be provided to check the state of relay contacts.

Having located a suspected faulty module it is desirable to be able to check this unit before attempting to replace it. Fig. 18 illustrates an automatic test unit which puts the module through a test sequence and automatically indicates whether it is good or faulty.

The principle of repair by replacement is now generally accepted, and it is recommended that at least one spare module of each type is carried on board. This eliminates the necessity for ships' engineers to have an intimate knowledge of the electronic principles involved in the modules.

WORLDWIDE SERVICE AND TECHNICAL SUPPORT

The use of standardized packaged systems makes it easier for manufacturers to provide comprehensive system drawings and descriptions and to ensure that their worldwide

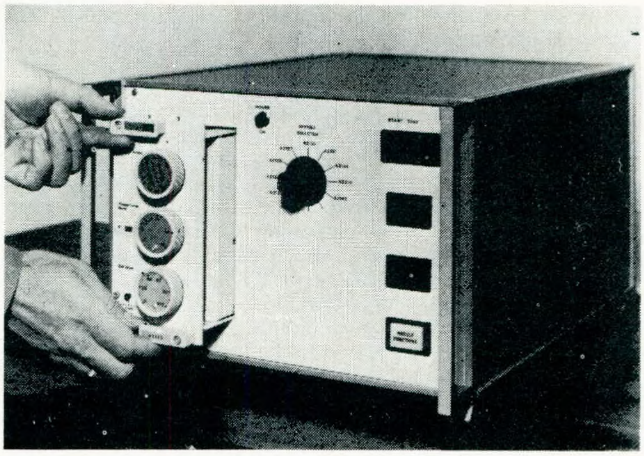

FIG. 18

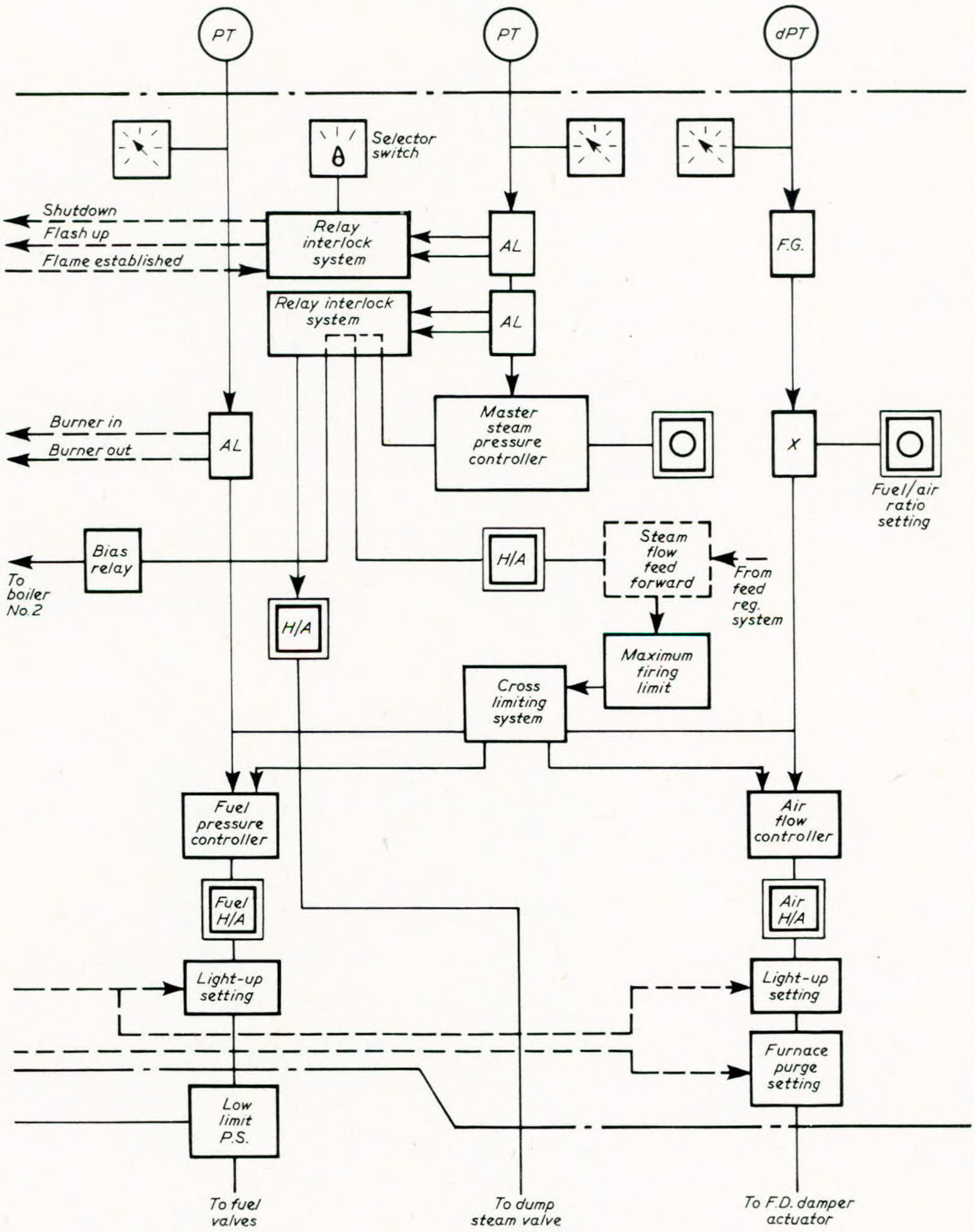

FIG. 19

service organizations are fully trained on fault finding and maintenance routines.

COMPATIBILITY WITH OTHER EQUIPMENT

It is important that the packaged concept does not result in an inflexibility of design. The use of a modular approach allows a variety of control system options to be available in the same basic package. For example, whilst a three-element feed regulator may be desirable for boilers having small steam drums and relatively high forcing rates, simpler systems, such as the mass/level system, or a two-element system employing steam flow and level may be perfectly adequate in less highly rated boilers.

Similarly, whereas most modern burners employ atomizers which have an approximately linear fuel flow/fuel pressure characteristic, it is important that the designer should not be restricted to using a fuel pressure/RDL combustion control system in all cases. The packaged combustion control system should provide the option of oil flow/air flow or oil flow/RDL control.

The interface between the modulating controls and the burner management system is relatively simple but nevertheless important. The burner management system normally requires contact initiation of the burner in and burner out sequences. Similarly, the control system must accept from the burner management system signals initiating furnace purge, burner light-up, etc. Theoretically there is no good reason why there should be problems of compatibility between the control system and the burner management, but in practice problems do occur. For example the transient disturbance which occurs when a second burner is lit can upset the combustion control. Close liaison between the burner manufacturer and the control equipment manufacturer is therefore very important.

CONTROL SYSTEMS CONCEPTS

The systems employed for modern boiler controls have been very adequately described in other papers(1,2). In auxiliary boilers, two features are frequently called for which may not be required in main boilers. Automatic control of steam dump may be specified because operating conditions can arise where the steam demand is reduced to zero, which would normally cause the burner management system to shut the boiler down. This may be undesirable in certain operating conditions as it necessitates going through a full light-up sequence before the boiler can be put on load again. It is therefore better to employ a system in which the boiler continues to operate at the pre-set minimum fuel pressure and any excess steam is automatically dumped.

With auxiliary boilers in diesel propelled ships it is necessary to have an auxiliary boiler stand-by ready to cut in automatically in the event of the waste heat boiler being unable to satisfy steam demand. In such an installation, the steam drum of the auxiliary boiler is normally used as a steam separator for the waste heat boiler, and the auxiliary boiler can therefore be brought into use fairly rapidly. When the steam pressure falls below pre-set limits the start-up sequence for the burner management system is automatically initiated. After the furnace has been purged, the fuel and air are automatically set to the light-up condition and this is maintained until the flame is established. Output is then ramped up automatically and steam pressure brought into full automatic control. Fig. 19 illustrates a packaged system which includes provision for these features.

OTHER INSTRUMENTATION

Auxiliary boilers being relatively simple seldom have a great deal of instrumentation. Smoke density measurement is, of course, an essential feature. In the past, oxygen analysers have seldom been fitted, but with the use of flue gas for the inert gas system in tankers, these are now more frequently called for. Smoke density meters have achieved a high degree of simplicity and reliability, but there is still considerable scope for development of a low cost oxygen analyser which has good sensitivity, a high rate of response and in which calibration and maintenance problems are reduced to a minimum.

CONCLUSION

The range of equipment now available to assist the use and generation of steam for auxiliary purposes at sea is the result of hard won experience. Today modern electronic techniques can provide the shipowner with equipment having a high degree of reliability. This has been achieved by a combination of sound design principles and long periods of testing. As with all innovative ventures it has been necessary to win the confidence of operators. This is simplified in the equipment described by the means provided for testing and fault location, with ready replacement of modules when necessary.

The boilers, burners, burner management and control systems are all basically flexible in that they can be made compatible with other types of associated equipment. There is much to be gained, however by considering the whole plant as a package, thereby minimizing the risk of problems arising during commissioning due to the lines of contractual demarcation being inadequately defined.

REFERENCES

1) HODGKIN, A. F. 1973. "Marine Boiler Development Over the Past Ten Years" *Trans.I.Mar.E., Vol. 85.*
2) LINDSLEY, D. M., and MACHELL, T. A. 1974. "Control Systems For Turbines and Boilers" *Trans.I.Mar.E., Vol. 86.*

Discussion

MR. R. F. THOMAS, F.I.Mar.E., opened the discussion by saying that in the past auxiliary boilers performed a single function on board diesel engined oil product tankers. This was simply to produce steam which was used for pumping cargo, and for use with other auxiliary systems.

The auxiliary boiler on such a vessel could now perform a dual role:

1) in producing steam;
2) providing a source of inert gas which after suitable treatment was used for the protection of the cargo spaces.

Such a boiler today was one part of a steam system which included a waste heat unit using the exhaust gas of the main engine.

Experience had shown the difficulties of sizing the waste heat unit precisely, so that the generating capacity matched the demand under all normal "full away" conditions. Therefore, it was agreed that it was desirable to supplement the waste heat unit output by automatic fixing of the auxiliary boiler to provide the exact amount of steam required. This might be achieved in two ways, either by intermittent firing or by continuous firing of a small burner.

One particular system with which Mr. Thomas had been involved comprised a waste heat unit coupled to a dual pressure boiler. This had two main burners and a small burner, the exhaust boost. The arrangement was designed for U.M.S. operation; in other words, at sea, at night, the machinery space would be unattended.

Further there were two distinct steam pressure operating ranges of the secondary system:

a) in sea conditions — 9 bar;
b) in port, manoeuvring and cargo pump operations — 13·8 bar.

While there were two distinct secondary system steam pressure operating ranges, a further facility was included so that while at sea, there was provision for making inert gas for topping up cargo tanks.

Such a system naturally had teething problems, but on the result of that experience, what had been learnt? Availability, reliability and maintainability, in that order, remained the key words when the auxiliary boiler was used as the main source of inert gas.

Since the system was designed to be fully automatic, start up was achieved initially by purging the furnace with a main burner F.D. fan with the control damper full open, in preference to the extended time which would result from use of the much smaller exhaust boost F.D. fan. After a timed purge the lead main burner went through an ignition sequence to flame establishment. This train of events must be completed for firing to take place. The system relied upon a relatively large number of components which might be considered as a series chain. Whilst the reliability factor of individual components was high it was not unity. Hence the overall factor tended to be lower than one would like to have as the commercially acceptable level.

Partial redesign allowed the other main burner to become the lead burner, at the expense of isolating the first. But was this detrimental? Mr. Thomas would suggest the answer was no, because this facility would be, and was, used when some part of the first sequence was defective or had been isolated for on board maintenance. Some might say that such a modification reduced reliability, but this was far outweighed by the increased availability and maintainability of the overall control system.

Under certain restricted cargo discharge conditions, it was found that one main burner was just insufficient for the required steam demand. This resulted in cyclic cutting in and out of the second main burner.

On one occasion this cycle was seen to be less than ten minutes — an undesirable situation that tended to upset the inert gas quality. Careful consideration allowed a simple but effective modification to be made so that by manual intervention the exhaust boost burner could be used. After all, the cargo pumps were started manually.

A secondary spin off from the modification made the change over from the high to low pressure operating ranges a smoother operation.

These were two instances of modification resulting from operational experience and were offered as a gentle warning of the pitfalls of creating complex systems from behind a desk.

Whilst agreeing with the authors on their comments on electro-mechanical relays, it was added that when used in a continuously pulsed system early failure of such a relay would occur. Apparently relay manufacturers guaranteed the relay for 10^6 mechanical operations. Thus, in a pulsing cycle of two seconds, a guaranteed life of less than a month was achieved in this respect. In practice a life of several months had been experienced. Extending the service life made disaster in the form of total system failure a reality. Hence the examination of suitable alternatives became imperative. The use of a selected solid state switch had proved most reliable.

Whilst the capital cost was greater, this was considered to be more than returned in a short period, bearing in mind the real cost of shipboard labour, and the associated services in procuring and sending spares to the vessel.

Finally, with reference to the principle of repair by replacement, it was agreed to be now generally accepted for electronic components, but the recommendation that at least one spare module of each type should be carried on board needed amplification. By good design the number of different modules should be kept to a minimum. It was the responsibility of the equipment designer, surely, to do his sums, so that the customer got the best deal. Whole life costing was the key word at this point, and surely if designers did their homework in this direction they would be amply rewarded, namely, with satisfied customers.

MR. A. N. S. BURNETT, F.I.Mar.E., stated that he found the whole paper extremely interesting and full of many things that had been talked about at the Institute over a number of years as to what should be done.

On the main topic of design and modules, Mr. Burnett asked the following questions.

As the word "ship" did not occur in the title of the paper, would the authors be prepared to give their views on auxiliary boilers for offshore platforms and rigs, for they were regarded by Mr. Burnett as also part of the modern marine environment.

Mr. Burnett heartily endorsed the authors' comment that there was an advantage in considering the whole plant as a package. Surely the main point of the advancement of design of auxiliary boilers laid not only with the boiler itself but with a system.

He quoted from the paper:

> "The confused state of the shipping industry defeats any accurate attempt at forecasting ship types required in the near future."

Which included that they seemed to be at a loss about the forward range situation. This was a slightly forward statement because what had been heard at this meeting showed how the market was looking ahead.

Did the authors feel by looking at the likely demand for instruments in ships, both in gas turbine, steam and diesel, that they had found the likely use for auxiliary boilers, and the likely demand for the kind of outputs which the boilers could provide?

What about excess air — particularly with gas boilers? This was a very important matter.

Had any type of machinery health monitoring been considered, so as to give the operator some simple idea of whether there was excess air or not? The temperature of the air in the air ducts was one parameter the authors might like to comment on.

Apart from anything mentioned in the paper, there were particular instruments which did this function, but it must be remembered that this required application and understanding. Did the authors know of some health monitoring device, already made, which would give a normal indication to the watchkeeper of this parameter?

With reference to U.M.S. and electronics — in the marine industry it took something like ten years or so, for some brand new technique to become more or less accepted. In addition, having been connected with instrumentation for some years and generally involved in the installation of fairly sophisticated systems, Mr. Burnett's previous company had talked about such electronics in about 1964 and 1965. Then the marine industry had not wanted to consider the use of electronics seriously. Now ten years later, the remarks in the paper were apposite to the present situation. Clearly the situation had been reached where electronics were reliable — they did a good job, they were repairable, modules existed, and testing of modules was quite a simple matter, as was the replacing of them.

The time had now come when it was necessary for somebody, perhaps the manufacturers, but at any rate the users and suppliers, to put their heads together and say they had gone through the learning period, a lot of mistakes had been made, but now a plateau had been reached where electronic systems were reliable — they could be used, and it was known how to use them. One of the main points of the paper was the supporting of this concept, and it was estimated that a great deal of good would result from it.

The next item Mr. Burnett wished to talk about was connected with the above; standardized control systems. All sorts of control systems had been offered by the manufacturers. The stage had been reached where in the case of some suppliers' control systems, the work involved in the selection and use was much more difficult.

Regarding U.M.S. — if such modern ideas of operation were going to be successful, the time had been reached when shore trials prior to use at sea of the standardized equipment was becoming a necessity, so that owners and suppliers could combine and seek to eliminate problems before the standardized systems were put to use in their ships, and it was hoped, platforms.

The very compact installation of the instrument panel was noted.

The authors were commended on the amount of work that had been carried out over the years in order to get something accepted for use on aircraft carriers and to produce something which was simple to install.

Mr. Burnett referred to the section on Basic Requirements for Control Systems, and in particular the low cost of instruments among the four main criteria. The point of low cost instruments had been well aired over the last ten years, i.e., where users had chosen low cost instrument systems at their peril. If an instrument was required to do its job reliably it could not possibly be the cheapest one on the market. It cost something to make a reliable instrument, and it cost something to make an instrument indicate what it was required to indicate clearly. It also cost something to devise a satisfactory method of indication, and to enable simple recognition and identification of the significance of what the instrument was trying to indicate. So therefore, low cost instruments were not an important consideration at all. Would the authors comment on this? The authors' other comment about the shipowners was very fair.

Research work had been done by Mr. Burnett for various international companies in the European market and elsewhere into life costing, and it was found that the one thing the majority of shipyards in Europe — and in this case Japan as well — and the majority of the buyers and installers of equipment were interested in was the cost to them of the whole installation — the initial cost, plus the cost of communicating with the manufacturers, the installation cost, the commissioning cost and the cost of guarantee. Mr. Burnett had not met a single operator on the continent who was interested in anything else, other than the total cost, which meant starting from the initial design of the ship, or concept, to the date when the ship was out of his control, which was the end of the year's guarantee period. So that life costing was practised by shipyards much more than most people recognized.

One last point was that having seen such an excellent design and forward-looking design and installation, in which area did the authors see the next main design step?

Dr. J. Cowley, F.I.Mar.E., (Chairman), in referring to comments made by a previous speaker, said that it did not appear to him that there would be a market for oil fired auxiliary steam boilers in the offshore industry. The great majority of the existing platforms were producing natural gas which was used to power prime movers and, for emergency or auxiliary purposes, diesel engines were employed. On the large oil production platforms, gas turbine and diesel engines were used. Any demands for hot water or steam were normally satisfied by the use of electric heaters in both types of platform.

The authors referred to the large number of boilers which were out of commission due to damage caused by low water level. It was to be hoped that this damage was not due to the practice referred to in the introduction to the paper whereby peak steam demands could be met for short periods by closing the feed valves and allowing the boiler water level to fall. This practice was not one to be recommended in a case of an oil fired boiler although it would be permissible in an exhaust gas boiler of high water capacity.

Dr. Cowley then referred to the standards of competence required of marine engineers to operate the range of auxiliary boilers described by the authors. A long time ago, it became evident that the conditions of auxiliary boilers on some motor ships was — to say the least — less than desirable. The Department of Trade, therefore, with the support of the shipping industry, introduced questions on auxiliary boilers in the examination papers set for Motor candidates. This was not very popular amongst the candidates especially as more and more questions on water treatment were introduced and some comments were received that these questions required too high a standard of knowledge. Considering the complexity, the operating conditions and the water quality requirements for the auxiliary boilers described by the authors, it appeared that the questions were probably not demanding enough. He would appreciate the authors' views as to whether the maintenance and operating standards of auxiliary boilers indicated that the general engineering expertise of ships personnel was of the appropriate order.

Referring to the advantages mentioned from the use of simmering coils to enable a boiler to be put onto line at full pressure much more quickly than if raising steam from cold, Dr. Cowley asked if the authors might give some further information regarding the design of this unit for retro fit applications to existing boilers.

Mr. G. T. H. Flanagan, F.I.Mar.E., said mention was made of protected surfaces in economizers. Did this still refer to the use of cast iron gills, or had further advances been made in this field? Reference had been made to the use of sodium sulphite, if this was so, did the relatively large amount of oxygen passing over with the steam, make the use of a filming amine suitable for the protection of an expensive auxiliary system, where wet steam conditions might exist?

Could a spinning or rotating cup type burner be used on the smaller units, and if not, would the authors give the limitations on the use of this type of burner with water tube boilers?

Membrane walls led to problems with overheated boiler casings in the event of a tube failure. What was the recommended procedure for the repair of this type of water wall at sea, where skilled welders were not available?

Reference had also been made to the danger of oil spillage in furnaces. Would the authors comment on safety procedures if inadvertantly a large amount of unburnt fuel oil should enter a fully water cooled furnace?

With regard to electronic components, fears were sometimes expressed that due to the rapid change in design concepts, there might be problems about the availability of spares for these components after a few years' operation.

Correspondence

Lieut. K. J. Skinner, R.A.N.R., M.I.Mar.E., asked, with reference to Fig. 5, what provision was made for tube cleaning, and how were the turbo blower uptakes isolated during the cleaning process when carried out in port? On a similar plant there was no isolation provision, which resulted in three turbo blowers "downstream" having to be unshipped for cleaning when a shore gang hosed out the boiler tube element with a handy water hose.

Also what provision was made, or recommended, to prevent an updraught through the main engine cylinders when firing the boiler in port.

Would the authors please comment on the following. Lieut. Skinner wrote that it was essential for the boiler water chemical reserves to be brought up to standard before shutting down a boiler, but he queried the practice of adding chemicals to a boiler in wet storage.

Without circulation, after a chemical addition, a boiler water sample would indicate "no change" a gross overdose of treatment or somewhere in between the two depending on the physical relationships between the chemical injection and the water sampling points.

In one VLCC the 30 bar auxiliary boiler was used as a steam generator whilst at sea, the generating coil being situated in the steam drum. When generating the circulation between the steam and water drum was non existent, the latter became cold. This made the establishment of stable chemical reserves in the boiler an almost impossible task to achieve and when normal firing was resumed the chemical content of the water bore no relationship to the test results, obtained while in the generating mode. Also when first flashing to resume normal steaming a severe pressure drop was experienced as the cold water was circulated into the steam drum.

Lieut. Skinner asked what degree of heat losses were involved in the plant mentioned in the Operation section of the paper.

The authors suggested siting the bulk of the control equipment in a locked cabinet to prevent unauthorized tampering. Lieut. Skinner pointed out that electronic controls had pneumatic actuators as their muscles and were frequently designed for easy adjustment of their spring tensions, etc. This resulted in impulsive meddlers easily upsetting the balance of the control equipment without the necessity of entering the locked cabinet. It would be an advantage if the actuator adjustments (not the manual overside) had to be made with a special tool thus ensuring that an operator must make the effort of going and getting the tool before making uneducated adjustments. The effort of getting the tool would act as a deterrent.

Authors' Reply

The authors felt that the contribution to the discussion made by Mr. R. F. Thomas was a very important one touching as it did on a great many points related to the control systems and their complexity necessary or otherwise. Designers were all very keen to try and simplify systems since by so doing, using quality components, the overall reliability could be improved. The illustration given showing how a number of modifications had been made to a plant soon after the ship had been taken over, indicated that in that case the plant could not have been properly optimized in the first place. Had there been an opportunity of discussion at an early stage between the builders, the owners and the sub-contractors supplying the equipment, then perhaps a more suitable compromise would have been reached from the beginning.

Due to this lack of discussion many short-comings have been found in systems when brought into operation. Reliability was improved if intermittent firing could be eliminated. Continuous firing removed the necessity of furnace pre-purge and trial for ignition during which unreliability in the system tended to appear. For continuous firing it was necessary to ensure that burners could turn-down below the minimum heat input requirement of the boiler. Attempts to meet minimum turn-down requirements have led some builders to ask for minimum outputs as low as 72·5 kg/h of fuel (160 lb/h) for a boiler with an evaporation of 40 t/h to prevent intermittent firing, and also for flue gas to be suitable for supply to an inert gas system at that load.

It had been indicated by tests that turbulence and recirculation in the furnace zone resulting from high rate of air flow during purging could in fact increase the actual time necessary to completely expel resident gases from the furnace. It had been the practice, therefore, to reduce the rate of air flow during a furnace air purge to 25 per cent for three minutes if possible, but at least to give five furnace air changes.

Sometimes systems could become unnecessarily complicated with consequent reduction in reliability. In one instance functions were introduced where, on failure to ignite one burner, a furnace pre-purge followed by a trial for ignition period on the next burner was instituted automatically. The consequential cycling of burners made the situation worse than for a system with alarms followed by manual intervention after failure to ignite.

Life costing involved the supplier, yard and owner, this together with value estimating would require contingencies for modification during the guarantee period due to operational deficiencies not apparent during design period.

The combustion control system described in the paper was based on one set of combustion controls per boiler, two boilers per ship with approximately ten different types of control modules one of which, the monitor module, checked the output of the other control modules. Multiplicity of control modules presented a high reliability problem, but modules utilized in the systems were run for at least 100 hours before being incorporated and the whole system was factory tested.

With reference to reliability of components in systems in operation, no reports have been received of spare modules being utilized. In the event of failure of a module, the ease with which the system could be brought back on line outweighed the higher cost of carrying ten different spare modules.

The only way to ensure a realistic life for a pulse system would be to eliminate components with a statistically resolved life of less than two years.

Drilling and production platforms were certainly of interest to the authors although to date they had not been involved very much in the supply of boiler plant in the offshore field. There had been a number of enquiries for exhaust gas plant utilizing the heat contained in the exhaust gases of gas turbine generators to fulfil a heating load. The authors would be pleased to receive enquiries from Mr. Burnett or from any other source for equipment required on offshore platforms. The various items described in the paper were quite suitable for the conditions which would obtain offshore, and the application of marine boiler plant and its ancillaries would be natural in the offshore world.

System package design was something that the authors had tried to encourage people to follow. It was a method of design which might be called "total design" not employed very strongly in Western Europe. It had been seen in its most highly developed form in Japan, where shipyards had been able to get all the loose ends together and to design *in toto* so that there was compatibility, and any snags which arose were ironed out without the usual problems of division of responsibility which often plagued the commissioning of new ships in this part of the world.

To benefit the operators only the owners could nominate standardization of control systems in ships built by various shipyards. Cost effectiveness was not always easily estimated without operating experience and there were many instances where low cost instruments have been employed to the detriment of operators. If an instrument was to perform reliably it would probably not be the cheapest available, however, first cost was still the basis of selection in some cases and it was not known whether builders place a premium on control systems nominated by owners. The systems as discussed in the paper were in fact standard control systems. It was possible to build up control systems for steam turbine, gas turbine and diesel manoeuvring control using the same modules.

By using simulators where necessary both analogue and digital, many manufacturers now tested systems with an interconnecting plug in cables between separate parts of supply. These cables were made to length for fitting in ship. During these tests owners' representatives were often present and could check that all possible eventualities were catered for within the specification.

Having reached a current plateau in reliability the next development would be computer based control systems using micro-processors. With current acceptance of electronic control systems it might be easier for marine engineers to accept this new concept.

Provision of flue gas for inert gas systems with minimum oxygen content required initially a well designed air register. In multi-burner installations low excess air (with consequential low oxygen content in flue gas) could be maintained by keeping the minimum number of burners in operation, provided that burners not in use were capable of tight shut-off.

Plant was always monitored by use of instruments, but inferential methods of estimating excess air by reference to increase in draught loss or increase in uptake gas temperatures did not take into account possible fouling of surfaces or changes in feed temperature. Where inert gas systems were supplied oxygen content of flue gas was always monitored direct.

Reference in the paper to the confused state of the shipping industry was not meant to imply that the authors were in any way confused. It was felt that the general trend would, in the immediate future, show a market for smaller ships. This would encourage the use of diesel propulsion which meant a continuing demand for auxiliary boilers. Use of exhaust gas heat recovery equipment should increase because the diesel owner was just as interested as anyone else in operating his ships economically and he must, therefore, give careful consideration to these aspects of fuel saving.

Mentioning Dr. Cowley's reference to simmering coils, Mr. Hodgkin said Fig. 6 in the paper showed a new installation where the two nozzles with air cooled thermal sleeves passed through the drum end. In the retro fit situation these nozzles were arranged in a special manhole door which could be supplied to replace the original.

A degree of expertise was necessary to operate auxiliary water tube boilers, and whether there was enough attention given to the education of ships' engineers was a matter for consideration. The status claimed for the plant under discussion required that the operators had an interest in it. Sufficient interest would only be available if during their education a suitable understanding of the part played by steam as a source of energy in motor ships was given. Auxiliary steam plant was relatively simple and might be arranged for unattended automatic operation. It would,

TEMPORARY MEMBRANE TUBE REPAIR.

(Using Fillet Welded Insert)

When a Class'A'welder is not available to carry out the buttweld membrane tube insert repair either at sea or in a port, a temporary repair can be made using downhand electric welding to produce fillet welds on sleeves as shown below :-

Procedure.

Erect scaffolding when necessary in furnace.

Remove Veneer casing where necessary.

Mark off the length of damaged tube to be removed.

Drill $\frac{3}{8}''$ dia holes in membrane fins at one side of mark at top and bottom of the part of tube being removed (at'A')

Then drill 2-$\frac{3}{8}''$ dia.holes 2" above top mark and 1" below bottom mark on both sides of part of tube being removed.(B)

With the reciprocating saw provided and fitted with a narrow blade cut down middle of membrane fins at each side of the tube, care being taken to keep the cut in the centre of the fins.

FIG.I.

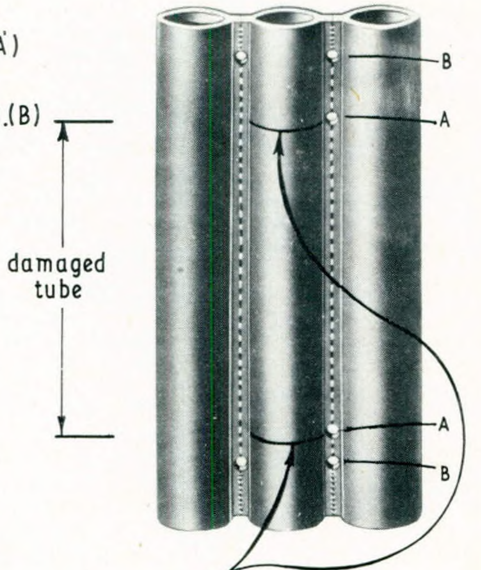

FIG. II

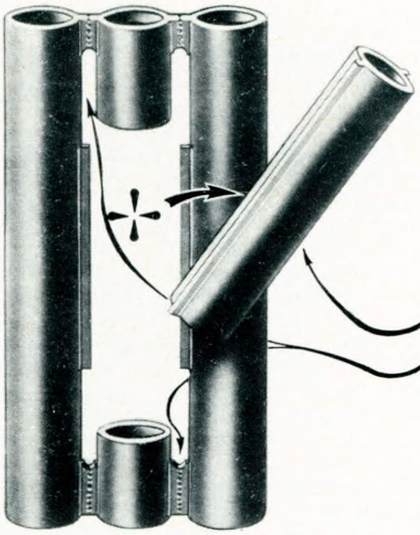

Saw horizontally through the tube where marked at top and bottom keeping as level as possible.

Remove tube with the membrane fin attached.

Remove membrane fin from both sides of tube and one side of adjacent fin 2" above cut and 1" below at top and 2" and 1" at the bottom.

File exposed ends of tube where the membrane fin was cut off so that it is made flush with the tube. Clean up tube ends with emery cloth until the first $\frac{3}{4}''$ is bright; measure distance between tube ends.

Using a length of spare finned tube remove fins from either side for $1\frac{1}{2}''$ at one end and 2" at the other file root flush and clean ends with emery cloth.

Weld sleeve at 1 with tube $\frac{3}{8}''$ inside, cut insert to just under the dimension obtained above measuring from edge of sleeve.(L).

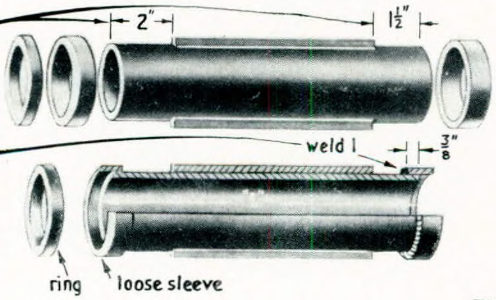

FIG. III

FIG. 20

TEMPORARY MEMBRANE TUBE REPAIR
(Continued)

FIG. IV.

Slip ring on bottom end of existing tube
Secure for welding $\frac{1}{2}$"-$\frac{9}{16}$" below edge of tube
Weld at 2 as follows:-
Weld in groove with 1 run using Babcock V type electrode using 80 volts 75 amps
A striker block should be used to strike initial arc and electrode tip should be warmed on this block.
Put insert in position with loose sleeve on it and secure leaving approximately $\frac{1}{8}$" gap top and bottom.
Let bottom sleeve rest on weld 2 on ring.
Weld at 3 as follows:-
Weld one run on root of sleeve and ring weld.
Complete one further run between ring and sleeve.
Weld at 4 with one run as above.
Finally weld at 5.
Hydraulically test boiler.
If necessary cut out weld at any leak, reweld and retest.

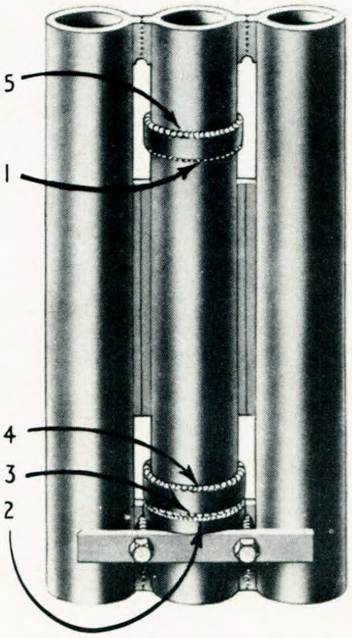

FIG. V.

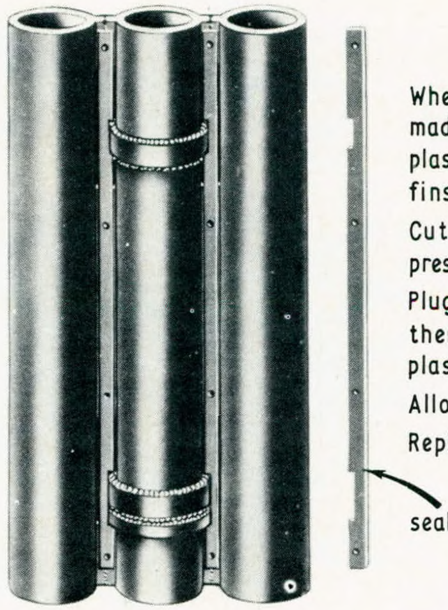

When satisfactory the membrane fins and gaps to be made gas tight by applying a thick coat of Belzona plastic metal down the length of the butting membrane fins, especially between the edges
Cut $\frac{3}{8}$" wide M.S. sealing strip to required length and press strip hard into plastic.
Plug weld strip as shown on fig.V, from the casing side, then fill up all the gaps from the furnace side with plastic metal.
Allow to air set, then light up boiler slowly to bake out.
Replace veneer casing.

The temporary membrane tube repair described above was devised by
Babcock & Wilcox (Operations) Ltd.
(British Patent Pending)

FIG. 20—*Continued*

however, only give of its best if treated with understanding, and the authors supported the view that the education of engineers should be aimed at generating the necessary interest and understanding.

Maintenance and operating standards obviously varied from company to company and it was reasonable to suppose that this might be partly due to an inconsistent level of engineering expertise. Care must be taken not to indict unfairly the operating staff as in many cases the means of disseminating knowledge concerning care, maintenance and operation left something to be desired. The authors' companies had and were still giving thought toward methods of improving operating instructions.

The remark in the paper about shutting off the feed supply to increase output, should not be taken out of context. It referred specifically to fire tube boilers having a large water content situated ashore, and the practice would never apply to a water tube boiler at sea.

Mr. Flanagan referred to the protection of heating surfaces exposed to the uptake gases from either boilers or diesel engines. This was necessary if the surfaces were expected to operate below the dew point and was commonly provided by the use of cast iron gills. Other means of protection had been considered and one of these was the use of vitreous enamel coatings. Care was needed when using these and the heat exhanger should be designed from the outset with the use of these coatings in mind. It was essential to maintain the integrity of the coating over the whole of the surface exposed to the exhaust gases, and where this could be done it was expected that enamel coatings would give a tube life at least five or six times that obtained from unprotected tubes.

Water treatment procedures for auxiliary plant had to take account of the fact that a deaerator was not always used and protection from oxygen attack was by chemical means. Where economizers were used an admixture of boiler water at the inlet could reduce the risk of attack inside the tubes. Even when the feed water entered directly into the drum there was a risk of oxygen being carried over with the steam into the steam system and there carrying on its corrosive activity. To combat this, as mentioned by Mr. Flanagan, filming amines were used. These methods of protection and treatment generally gave good results. Problems could arise in pipe systems where sections existed that were not normally circulated. Corrosion could occur in these areas and when on occasion they were brought into circuit, the accumulation of corrosion products usually found its way to the boilers.

Membrane tube panels have gained acceptance in the modern water tube boiler field over the past ten years for both main propulsion and auxiliary purposes. Some ships had been fitted with a single large main boiler using membrane tube panel construction and it had been necessary from the introduction of this form of construction to have means of dealing with a tube which might fail at sea. One way, and still a requirement of the survey authorities, was to plug the failed tube. Ordinarily this would be a normal thing to do but with membrane tube panel construction the tubes also formed the gas tight integrity of the boiler enclosure, so that if any tubes were plugged they must be protected on the gas side from radiant heat otherwise products of combustion would ultimately escape into the machinery spaces. Means were available for providing the necessary protection to a plugged tube, but in view of the size of the boilers the task of applying the protection would be time consuming and onerous. The simplest and most efficient method of repairing a damaged tube in a membrane panel would be to cut out the affected section of tube, welding in its place an insert. This would demand the skills of a qualified welder to make butt welds between the insert and the parent tubing. As such it would not be a method which could be widely used at sea and, therefore, a modified form of insert was designed which could be joined to the parent tube by relatively inexperienced welders using down-hand fillet welds, Fig. 20. This was accepted by survey authorities as a temporary repair which meant that it would be replaced by a proper butt welded insert at some convenient time. To the best of the authors' knowledge it had not been necessary to use one of these repair kits on any ship at sea, but the ability of inexperienced personnel to make such a repair has been demonstrated under simulated shipboard conditions. One example made by a man using welding equipment for the first time was tested and proved tight under hydraulic test at 138 bar (2000 lbf/in^2), demonstrating the adequacy of the method.

Spinning cup burners had been and were still being used in auxiliary boilers. Lack of control of excess air at lower loads militated against their use where flue gas had to be supplied to inert gas systems with oxygen content less than 4 per cent. This was due to a shortcoming in the design of dampers and not in the principle of combustion.

There were many suitable burners obtainable for use on water tube boilers. At present the twin fluidized atomizer with steam as atomizing medium was in widest use.

Oil spillage in furnace was a result of operator error. Trial for ignition functions only allowed for injection of 1 kg of oil into the furnace. If safety systems were overridden by operator and oil quantities were allowed to accumulate in the furnace, a decision had to be made, whether to burn off small quantities or to open up the furnace and manually remove the spillage. A complex situation might develop if oil was burnt off. Some control must be kept on the supply of combustion air to prevent large heat releases which would damage the boiler surfaces, but also the supply of air must not be restricted so as to allow the air fuel ratio to reduce to the point where if combustion air was increased the mixture might pass through the explosive range. Small quantities of oil could be burnt off but experience must dictate the extent of this.

Fears with regard to availability of electrical spares could be allayed by dealing with a reputable company who would make certain that spares were available for a period in excess of ten years.

Lieut. Skinner referred to Fig. 5 and the arrangement made for tube cleaning. This would depend upon operational circumstances and if necessary a set of steam sootblowers could be supplied. If cleaning on the other hand was confined to an occasional water wash in harbour, it would clearly be necessary to make proper arrangements for disposing the effluent without risk of contaminating other nearby equipment. Provision of suitable ductwork at the gas inlet side of the boiler with a hopper section arranged to collect the washings from which they could be disposed of through a valve to a drain system, should suffice.

If the exhaust gas boiler was arranged to be fired in harbour with the main engine shut-down, problems due to induced draught through the main engine cylinders could be

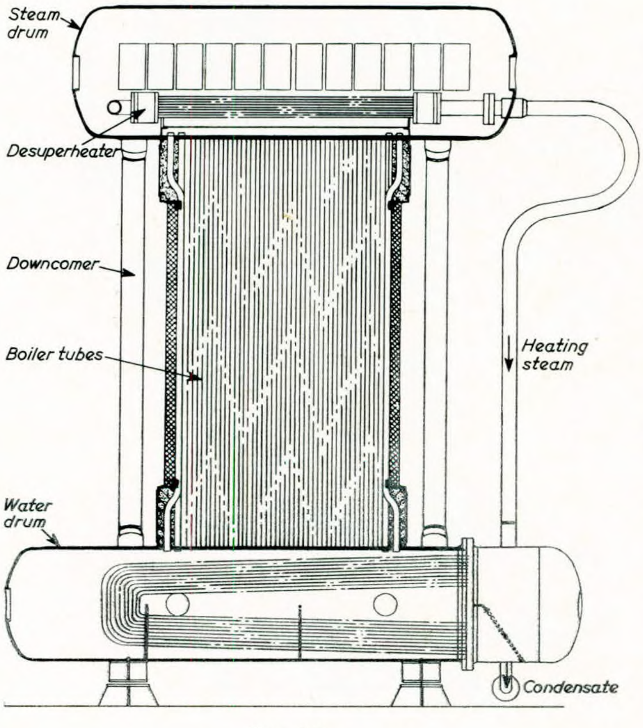

FIG. 21

overcome by interposing an interrupter in the ductwork between the turboblowers and the boiler. This could take the form of an uptake valve or a simple plate blank inserted at a convenient position. This latter would probably be a requirement in any case to permit turboblower maintainence whilst the boiler was used in harbour.

When the boiler was operated on engine exhaust the heat losses, given reasonable insulation, should not exceed about 2 per cent of the entering quantity. In the fired mode there might be a tendency for this to increase very slightly depending on how well the combustor, recirculating fan and ductwork were insulated.

In reference to pneumatic actuators, electrical equipment tended to be less prone to interference with adjustments. However, it was difficult to find a suitable robust electric actuator especially for modulating control and, therefore, the pneumatic actuator would be found even in electrical systems. If a person was determined to interfere with adjustments no matter what precautions were taken, a method of interference would be found.

Boilers wet stored should be regularly checked for sign of leaks and boiler water samples taken and analysed. If the hydrazine concentration was below 50 ppm chemicals should be injected to bring the concentration up to 200 to 300 ppm. To allow proper benefit to be obtained from this the boiler contents needed circulating and this could be done by lowering the water level and firing the boiler for a short period following which the shutting down for wet storage procedure was repeated.

The use of auxiliary boilers at sea as steam/steam generators seemed a sensible way of using a unit which would otherwise spend a large proportion of its time idle. Not only did this reduce initial investment costs but it also improved the chances of the boiler staying in good condition. The arrangement of the boiler as a steam generator needed some thought and the example quoted by Lieut. Skinner where the heating coil was in the steam drum, did not have much to commend it. Fig. 21 showed an arrangement familiar to the authors where the heating coil was in the lower drum thus circulating the boiler completely when in use. In this particular case the heating steam was superheated and so a desuperheating coil was fitted in the steam drum through which the heating steam passed on its way to the condensing section in the lower drum.