THE INSTITUTE OF MARINE ENGINEERS

TRANSACTIONS

1973, Vol. 85

Paper read at the Institute on Tuesday, 10 October, 1972

OPERATING EXPERIENCE WITH GAS TURBINE CONTAINER SHIPS

T. L. R. O'Hare, C.Eng., A.M.I.Mar.E.* and
J. G. Holburn, C.Eng., M.I.Mar.E.*


Mr. O'Hare


Mr. Holburn

The reason for selection of aircraft derivative gas turbines and principal design features of the machinery installation for a class of four high speed container ships are presented. Subsequent operational experience, although at this point in time somewhat limited, is measured against initial expectations. The performance of auxiliary systems, maintenance requirements and the importance of fuel system cleanliness are discussed. Details of gas generator change outs, with particular emphasis on the problems posed by environmental conditions are presented, with the belief that this is the only real barrier to the realization of the full potential of this type of propulsion machinery.

INTRODUCTION

The appearance and subsequent development of the gas turbine as a power unit and its conspicuous success, especially in terms of reliability in aircraft, made it inevitable that this type of engine would eventually be a logical choice to compete with steam and Diesel engines as shipboard main propulsion units.

Excluding the navies of various countries, there have been only three commercial applications so far of gas turbines. In 1951 the Shell tanker *Auris* was the first commercial ship to utilize gas turbine power. This was followed in 1956 by the conversion of the liberty ship *John W. Sergeant* by the U.S. Marine Commission. In neither case however were the ships specifically designed for the use of gas turbines. Additionally, the gas turbines fitted to both vessels were of the industrial or non-aircraft type.

In December 1967, *Admiral W. Callaghan* became the first commercially operated ship to be initially constructed with aircraft derivitive gas turbines as main engines. The description "commercial" must, however, be used advisedly as she was designed and built at the request of the Military Sea Transportation Service of the United States Navy as an experimental ship.(1)

In March 1971, the authors' company took delivery of *Euroliner*, the first of a series of four similar twin screw container ships, designed from inception for propulsion by aircraft derivitive marine gas turbines. The second ship, *Eurofreighter*, entered service at the end of July 1971 and was followed by *Asialiner* in mid-February 1972. The fourth ship, *Asiafreighter* has, at the time of writing, just completed her sea trials.

The vessels were built to the order of Scarsdale Shipping Co. Ltd., a subsidiary of J. & J. Denholm Ltd., at the Shipyard of Rheinstahl Nordseewerke, Emden and are on long term charter to Seatrain Lines of New York. Seatrain and J. J. McMullen Associates were responsible for the conceptual ship design, which was arrived at after a long series of comparisons and evaluation studies had been carried out.

Since entering service, the three operational vessels, which are the subject of this paper, have been trading continuously between the East Coast of the U.S.A. and Europe.

Because of the specialized nature of the *Euroliner* class vessels, the authors feel it is essential to outline in some detail the considerations which led to the selection of gas turbines as main propulsion units and the principal features of the installation, before presenting the operational experience gained thus far.

PROJECT CONSIDERATIONS

In 1967, when the project studies for the North Atlantic container ship operation first began, simultaneous consideration was being given to the further development of container terminals and shore facilities within the area of projected trading. The climate was right therefore, to examine the potential problems which could arise in relation to the marine portion of the container transportation system. It was felt that a fast in-port turn round time, the ship's ability to maintain a tight schedule and total ship availability throughout the year were crucial to the whole operation.

The objectives began to emerge clearly as studies progressed. They included:

a) entrance into the competitive North Atlantic trade would require considerable innovation;
b) a fast, reliable, regularly scheduled service was required which would demand high ship availability;
c) in a "door to door" container system the ship is the greatest single weak link as it is the vehicle in the system with the greatest quantity of cargo at any point in time—ship availability and reliability should therefore be of paramount importance;
d) main propulsion reliability and ship availability are not necessarily synonymous—the time required for repairs must be considered in relation to ship availability;
e) the slow but eventual main propulsion system deterioration which has been experienced in the past with steam and Diesel plant would not be acceptable if the desired ship availability was to be maintained;
f) in the total system economics, the highest return on investment would not necessarily be obtained from the installation which offered the best propulsion efficiency, lowest maintenance cost or lowest fuel rate.

Having established the objectives, the conclusions finally reached after a number of design and evaluation studies had been carried out were:

---

* J. and J. Denholm (Management) Limited.

a) a vessel was required, of about 244 m (800 ft), which would maintain a 25 knot schedule, ensuring weekly regularity for the total system—a service power of about 37 285 kW (50 000 hp) would be needed;
b) all planning should provide the ship with a twelve hour in-port turn around capability including repairs and normal maintenance to the main propulsion unit;
c) the vessels should be designed for unmanned machinery operation and automation employed as much as was technically and economically desirable—both for operating economics and ease of changing crews, which the arduous schedule would require;
d) the hull should be designed for maximum cargo capacity within the constraints imposed by pier spaces, efficient cargo handling, operating flexibility and desired ports;
e) the aviation type gas turbine for main propulsion offered the greatest potential in achieving the desired objectives.

MAIN ENGINE SELECTION

In the choice of main propulsion machinery, many factors had to be considered in relation to the total economics of the projected operation. Since the cost equation for a specific ship designed for a particular trading pattern is very complex, only a brief summary of the factors which influenced machinery selection can be given here.

Selection was primarily effected by:
a) power requirements and engine availability;
b) machinery and space requirements;
c) cost of purchase, installation, operation and maintenance;
d) reliability, fuel availability and meteorological conditions imposed by the specific trading patterns.

The design and evaluation studies carried out included the use of steam turbines, slow speed direct drive Diesel engines, medium speed Diesel engines, aviation and industrial type gas turbines.(2) At an early stage it became clear that a great deal of development work remained to be done before the industrial type gas turbine would be a competitor, and it was therefore dropped from the comparison studies. It was known however, that a marinized aircraft type gas turbine of suitable power and proven performance was available, namely the Pratt & Whitney FT4A-12, and this engine, which was the final choice, was used in evaluation studies.

With the exception of maintenance and fuel costs, the aviation derivative gas turbine showed significant advantages over conventional systems. Examples of these were lower first costs, lower installation costs, increased container capacity, ease of maintenance and repair leading to increased ship availability, hence a greater return on investment. It would also be possible to uprate the engine in service by easily incorporating design developments.

Specifically, the engine selection enables:
a) each vessel to carry 60 more 12 m (40 ft) containers than would be possible with the comparable steam turbine design;
b) a saving of over 100 000 man h/ship in installation costs;
c) an increase of ship availability, as a gas generator can be changed out and replaced within eight hours;
d) a reduction of annual out-of-service time for maintenance and drydocking to two or three days, as major engine overhauls are carried out ashore.

GENERAL DESIGN

The graceful and distinctive lines of the *Euroliner* class vessels can be seen from Fig. 1. Her principal particulars are:

Length overall	243·4 m	(798 ft 6 in)
Length between perpendiculars	224·95 m	(738 ft $\frac{1}{2}$ in)
Breadth moulded (Max.)	30·5 m	(100 ft $\frac{7}{8}$ in)
Depth of Upper Deck	19·20 m	(63 ft 0 in)
Draught (Designed)	9·906 m	(32 ft 6 in)
Block coefficient	0·534	
Deadweight	28 432 t	(27 984 tons)
Total power (MCR)	45 040 kW	(60 400 shp)
Design speed at 42 640 kW (57 180 shp)	26·4 knots	

MAIN ENGINES

The main engines are Pratt & Whitney FT4A-12 gas turbines which deliver a maximum continuous power of 22 520 kW (30 200 shp) at 3600 rev/min.

A complete engine Fig. 2(a) consists of a gas generator coupled by means of a diffuser casing to a free turbine. The gas generator is of the twin spool type with an eight stage low pressure compressor, a seven stage high pressure compressor and a compression ratio of twelve. The burner section consists of eight combustion cans located in an annular arrangement around the shafts between the compressors and turbines. Each can is fed by six fuel nozzles. The cans are enclosed by an outer case which can be unbolted and slid back to allow inspection or removal of the cans. A single stage turbine wheel drives the high pressure compressor and a two stage turbine drives the low pressure compressor. The free turbine is a two stage reaction type and is not connected in any way to the gas generator except by means of the diffuser casing. Figs. 2(b) and 2(c) are typical pressure and temperature diagrams at various stations throughout the engine.

THE MARINE POWER PAC

To reduce installation time and facilitate later removal of either a gas generator alone or the complete power unit, a

FIG. 1—*Euroliner*

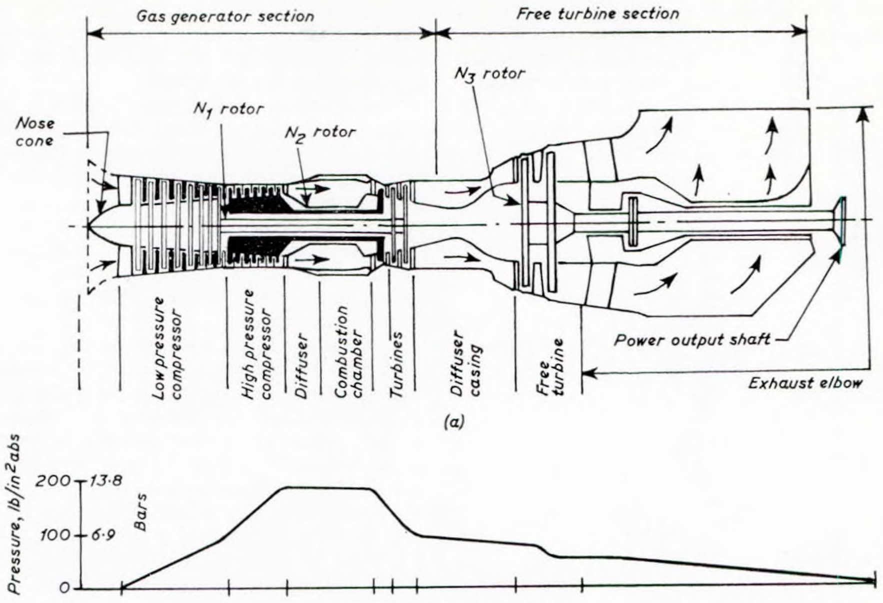

(b) INTERNAL PRESSURE

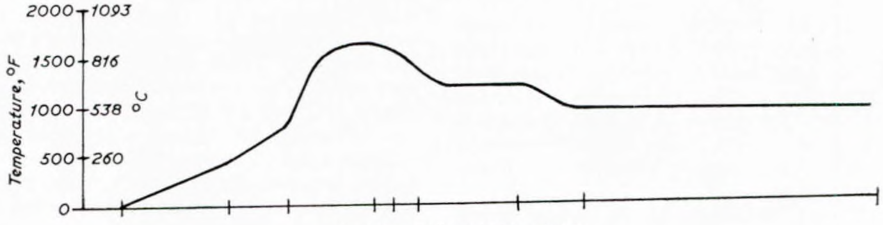

(c) INTERNAL TEMPERATURE

FIG. 2

modular system known as a "Marine Power Pac" was developed by the engine manufacturer.⁽³⁾

Each Power Pac consists of a gas generator and free turbine assembly mounted on a suitable base. Once in position, the module requires only to be connected up to air inlet and exhaust trunking, power, fuel and fire protection systems.

The Power Pac, Fig. 3, is 8·2 m long ,2·4 m wide and 2·7 m high. A gas generator, or indeed the complete Power Pac, may be unshipped through a 2·9 m × 2·9 m door in the aft engine room bulkhead, to the No. 8 hold.

The base of the module is of box girder construction and carries a gas generator enclosure, Fig. 4, constructed of sound absorbing walls and roof. The roof panel is held down in position by three latches on each side, and is thus easily removable, to allow for gas generator change out and replacement. The end panels have removable sections to permit vertical removal of gas generator or free turbine.

The floor is formed by plating over the top and bottom of the base section in way of the enclosure and filling the space between with fibreglass sound insulation.

The gas generator inlet bellmouth extends beyond the aft end of the enclosure, which abuts against a plenum chamber at the foot of the air intake ducting, while the heavily insulated free turbine is mounted on the base outwith the forward end of the enclosure, see Fig. 9.

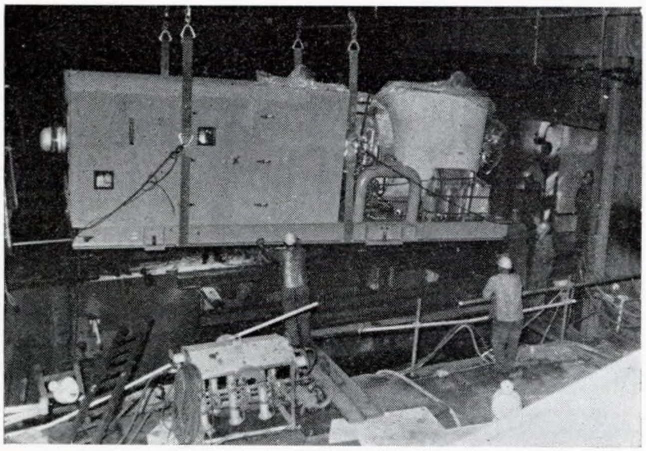

FIG. 3—*The Power Pac*

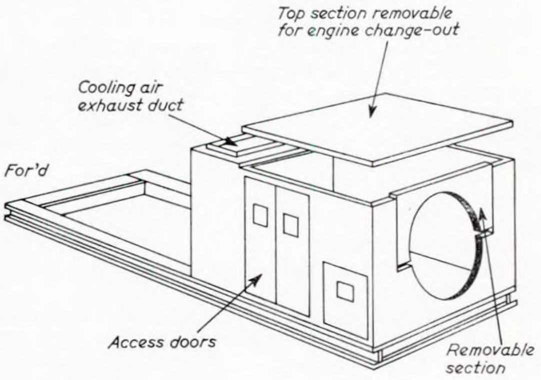

FIG. 4—*Power Pac base and G.G. enclosure*

The engine mounting arrangement is illustrated in Fig. 5. The aft mount, which secures the gas generator, consists of two pedestals supporting a beam from which the engine is suspended by a ball joint arrangement. The pedestals pivot axially about a clevis on the base. The engine is thus supported vertically, but restricted from lateral movement while complete freedom for radial and axial thermal expansion is allowed for.

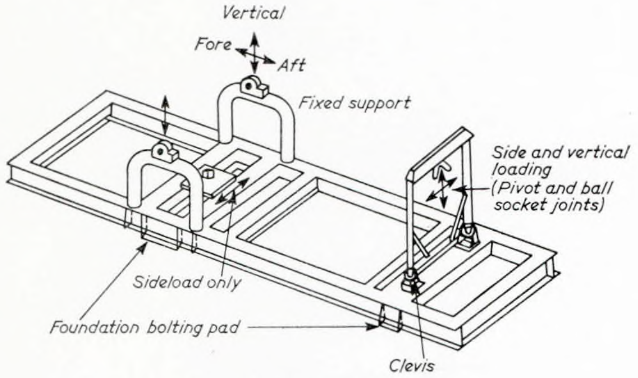

FIG. 5—*Engine mounts*

The free turbine mounts, which are supported on two inverted "U" shaped tube weldments, consist of two housings which accommodate trunnion shafts connected to ball joints attached to the turbine casing. The shafts can slide freely in their housings to allow for radial expansion. One mount is in a fixed position while the other is free to pivot axially. With this arrangement, vertical loading is taken up by both mounts while axial or thrust loading is borne only by the fixed mount.

A keel mount, attached to the bottom of the turbine casing and located within a fixed saddle block on the base, takes up side loads only and maintains the engine's transverse alignment.

Included within the Power Pac are fire detection and extinguishing equipment, all necessary electrical cables and piping for fuel, ignition, starting and monitoring systems, lubricating systems with coolers, temperature regulators, lubricating oil tanks and precipitators. All external engine connexions are code marked for ease of identification when engine change out and replacement is required.

Two separate lubricating oil systems are fitted in each enclosure, one for the gas generator and one for the free turbine. The lubricating oil system for the gas generator consists of a 70 litre (15·4 gal) reservoir, sea water cooler, 25 micron duplex filter, oil temperature regulator and metallic chip detector. Oil from the breather system of the gas generator is vented to an electrostatic precipitator mounted outside at the forward end of the enclosure, whereby the oil particles in the mist are ionized, precipitated on collector plates and returned to the gas generator lubricating oil system. Clean air is then exhausted to the atmosphere from the precipitators. The object is not only to allow discharge of clean air but to ensure recovery of the very expensive synthetic oil from the breather system.

The free turbine lubricating oil system is similar to that of the gas generator except that the reservoir is of 40 litres (8·8 gal) capacity. The total weight of a Power Pac module is only 13 600 kg (13·4 tons), made up of gas generator 2340 kg (2·3 tons), free turbine 3700 kg (3·6 tons), base, accessories and enclosure 7560 kg (7·4 tons).

AIR INTAKE AND EXHAUST SYSTEMS

Intake—Design Problems

An important design consideration was the possible re-ingestion of exhaust gas.

Wind tunnel tests conducted at an early stage on funnel design ensured that smoke ingestion would not be a problem. This has been amply confirmed in service. In this connexion the only modification found necessary has been the re-siting of an oil tank and system venting point originally positioned at the port aft edge of the funnel deck. The oil "smear" from this on demister vanes (see later description) proved irritating but was easily corrected by repositioning the outlet point some 3 m (10 ft) above the deck level.

Air intake and plenum chamber design present however, many other vital problems which are well enough known but not so easy to overcome.(4) Foremost among them are prevention of salt ingress, ensuring minimum pressure drop between intake and engine, maintenance of uniform velocity distribution at compressor intake and also sound attenuation.

In the design of *Euroliner* class vessels, recognition had to be given in particular to the basically inclement ambient conditions which would exist for the greater part of the year in the North Atlantic.

To a degree, toleration of salt ingestion can, and has been, offset by the selection of "marine" materials and special coatings for such items as nozzle guide vanes and turbine blades. Such materials include the extensive use of titanium, stainless steel, and nickel, cobalt and chromium alloys. While the existing choice of materials has to date proved broadly encouraging, with ever advancing developments in metallurgy, neither the authors nor the engine builders would claim that the present state of the art represents a design end point.

The problem which arises due to salt ingestion is what is described by the engine builders as sulphidation. This is in essence a hot corrosion phenomenon. It might perhaps more properly be called oxidation-sulphidation, since both processes occur simultaneously. Turbine section materials (i.e. nickel and cobalt base alloys) contain chromium and/or aluminium in their compositions. These elements form tough stable oxide films on part surfaces even when exposed to ambient room temperature conditions, and are normally self-healing.

So long as the chromium or aluminium oxides are continuous the part exhibits considerable corrosion resistance. In the sulphidation process, during combustion, particles of molten sodium sulphate are formed from sulphur in the fuel and sodium which is contained in airborne sea salt, or possibly as a fuel contaminant. The molten Na_2SO_4 particles collect on turbine part surfaces, being very adhesive in the molten condition. The actual corrosion starts at the molten salt/part interface. The salt reacts with the protective oxide film on the part and prevents it from healing. Sulphur crosses the interface and combines preferentially with chromium, preventing it being protective. The oxygen in the hot gas stream can then oxidize the unprotected metal in these areas. Once started, this process can prove self propagating and can be stopped only by the complete removal of all oxidized material and all metal sulphides from the metal matrix.

Inevitably therefore, the large amounts of air involved at the power levels considered, up to 425×10^3 kg/engine h, make the dangers of drawing from a salt laden atmosphere very real. From the air intake point of view the primary design aim therefore was to exclude sodium by ensuring entrapment and drainage of moisture entrained in the airstream.

Air Intake Arrangement

The existing air inlet arrangement, which owes much to experience gained on *Admiral Callaghan* and to the very valuable advice and guidance of the engine builders, consists essentially of a generously proportioned vertical duct extending upwards from each engine plenum chamber to an air intake at the lower bridge deck level. Each intake is about 3 m (10 ft) high and 3·6 m (12 ft) wide and situated on the aft side of the house with a centre point about 30 m (97 ft) above the base line and some 9 m (30 ft) from the ship's side. They are the two large apertures shown in Fig. 6.

At each inlet is situated a demister of the static corrugated vane type. Essentially such demisters act as inertial separators. They are composed of vertical and parallel aluminium vanes spaced at intervals of about 12·7 mm (0·5 in). There are four demister banks at each air intake. Each bank is made up of two sections, one on top of the other, with a drain trough under each.

Entrained water particles are removed from the incoming airstream by a series of impressed changes of direction and impact on the vanes, are collected in troughs at the bottom of the device, and drain away through sealed scuppers.

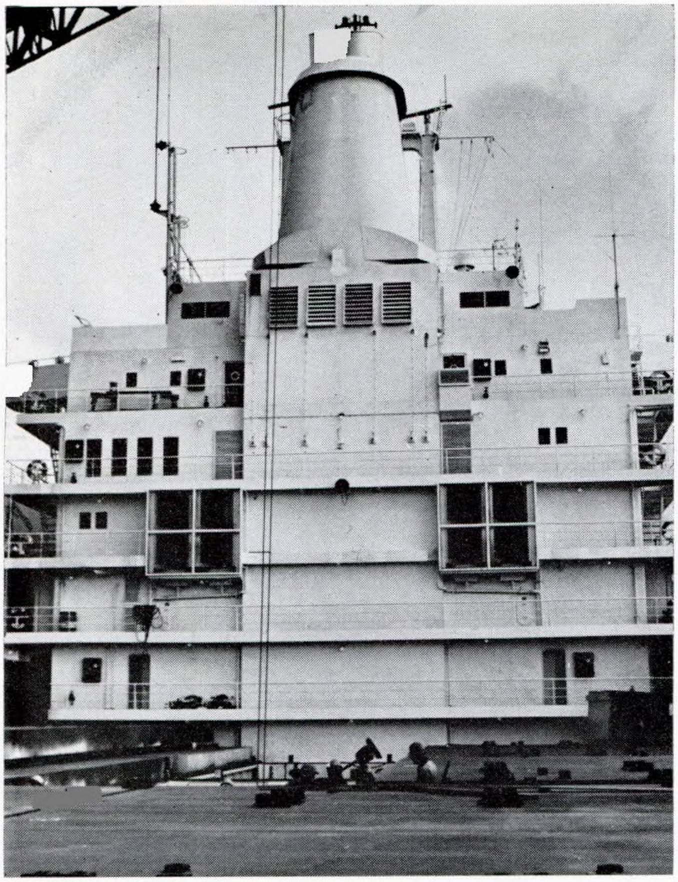

FIG. 6—*Looking forward at air intakes*

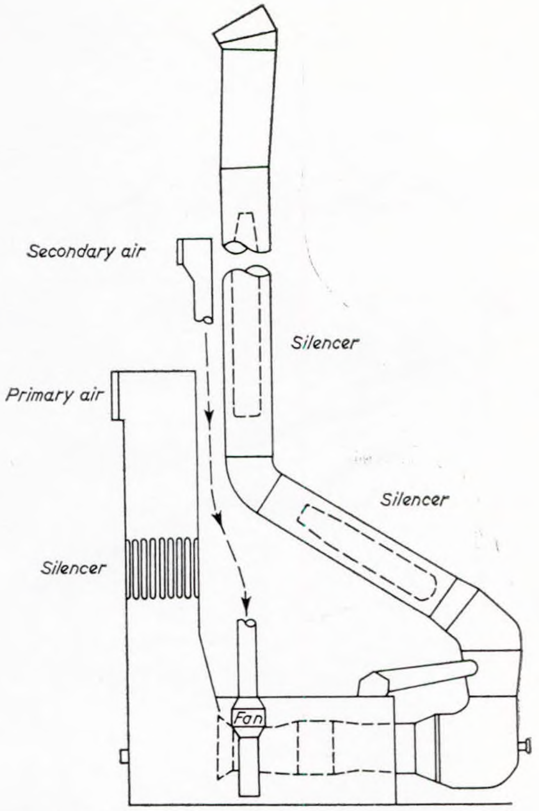

FIG. 8—*Air intake and exhaust arrangement*

Initially, two designs were considered, Fig. 7. While both were of the same type, their vane configurations differed. Type (b), which impresses a greater number of directional changes on the airstream, was found to combine the advantages of a higher overall extraction efficiency with a lower pressure drop and was ultimately selected as being the more suitable for the aerodynamic requirements of this application, i.e. airflow of 118 kg/s (260 lb/s) and velocity of 11·5 m/s (38 ft/s). Fig. 8 illustrates in simplified form the configuration of air inlet and exhaust ducting.

Approximately two thirds of the way down the vertical duct a series of 2 m (7 ft) high sound baffles or splitters were fitted and are the only fittings within the airspaces, the sides of which are smooth finished and clear of all obstruction. The vertical ducting terminates in a plenum into which projects the engine bellmouth. Above the bellmouth the forward ducting wall slopes forward to meet the gas generator enclosure interface. This section contains a large access door which swings inward to facilitate engine removal (see Fig. 9). The walls of the vertical ducting and plenum chamber are sound-proof.

A pre-building mathematical study of the duct design predicted a low total pressure drop of 3·5 mm Hg (1·87 in H_2O) from inlet to compressor bellmouth which was found to be 0·1 mm Hg (0·57 in H_2O) lower than actually measured during ship trials. Secondary air, used to cool external engine components, is brought into the outboard side of each engine enclosure by means of separate ducts. The duct inlets are situated one deck above the engine air intakes and axial flow fans are installed in the ducts adjacent to the enclosures. The air exits from the forward top of the enclosures into ducts in the main exhausts.

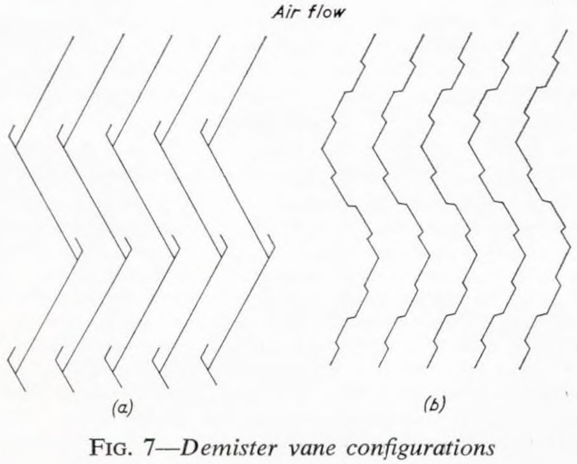

FIG. 7—*Demister vane configurations*

Exhaust System

There is a free turbine elbow which is coupled to the exhaust system by a metallic asbestos expansion joint. Beginning at the elbow, the exhaust duct consists of a circular-to-rectangular transition duct which is angled inboard 30° from the vertical. The next section is a 60° rectangular-to-square transition elbow followed by a square-to-circular transition duct. An expansion joint follows, then a circular duct containing a cylindrical torpedo shaped noise silencer, extending aft at 30° to the horizontal. Another expansion joint and a short 60° elbow brings the duct to a vertical position before entry into the funnel. An additional silencer is installed in the vertical rise. Both silencers are tapered down to about half diameter over approximately one-third total length. In the funnel area, the two exhaust ducts are joined into a single duct, gradually increasing to an elliptical shape with a separation wall in the centre. The angled sections of the uptake are supported by spring loaded stools. A number of stainless steel expansion pieces are fitted in the vertical section of the exhaust which is supported by spring loaded hangers. Exhaust duct pressure was measured during trials at 5·2 mm Hg

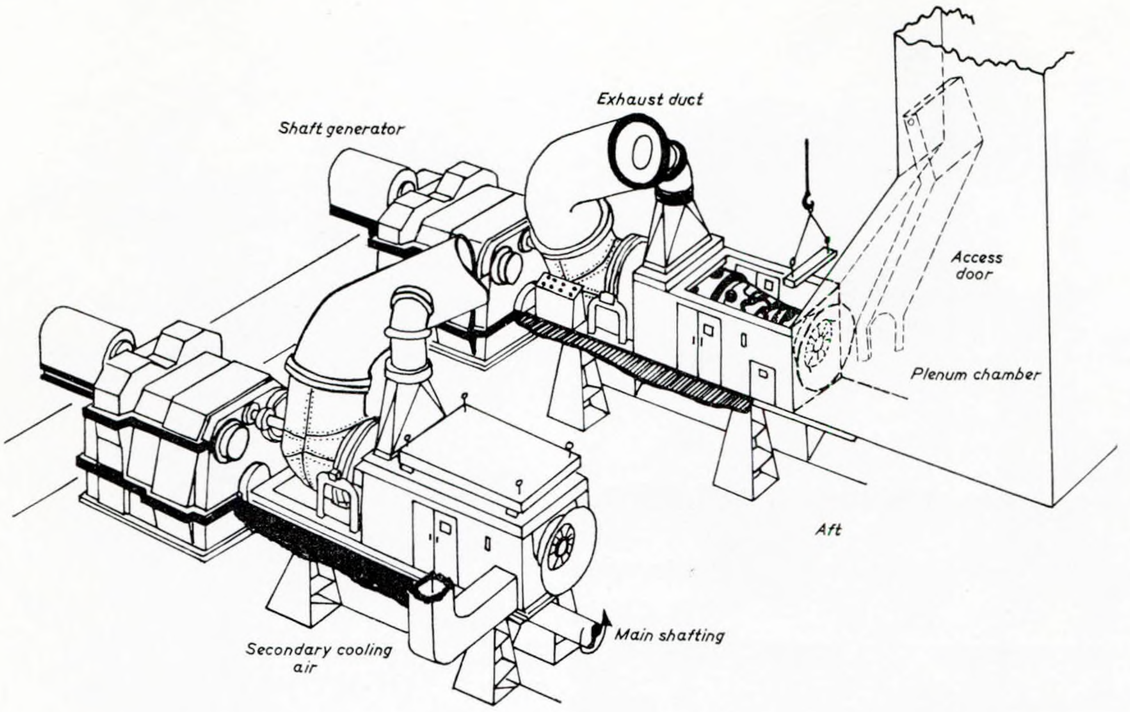

FIG. 9—*Propulsion train arrangement*

(2·76 in H_2O) as opposed to the estimated design value of 10·8 mm Hg (5·8 in H_2O). This reduction was accounted for by late modifications in funnel design.

PROPULSION TRAIN

Since gas turbines are not reversible the decision was made to utilize straight reduction gearing coupled to controllable pitch propellers. The drive from the free turbine to the gearcase is taken through a Bendix flexible disc coupling.

The reduction gears are of conventional locked train double reduction type, each with one primary pinion, two primary wheels connected by quill shafts to a pair of secondary pinions, and one main wheel. The first stage reduction ratio is 4·597 to 1 and the second stage is 5·802 to 1. A notable feature is that the input power of almost 22 520 kW (30 200 shp) is transmitted through a single primary pinion as opposed to the more usual two pinion arrangement normal with a compound steam turbine installation. For this reason the pinions are hardened and ground.

Shaft generators are employed for electric power requirements and are directly coupled to an extension of the primary pinion quill shaft of each gear set. By means of a sliding tooth coupling the shaft can be disconnected from the gear set to enable the shaft generators to be run in port if required, without rotating the propeller.

The thrust block is at the forward end of the gear casing and the propeller shafting extends aft, below the gas turbine, allowing considerable space conservation. The diagrammatic arrangement is shown in Fig. 9.

FUEL SYSTEM

From the beginning it was realized that the aviation type of gas turbine was extremely sensitive to the potentially corrosive effects of contaminants in the fuel, already described. The greatest care was therefore exercised in the fuel handling system to provide the closest possible quality control.

Fuel is carried in wing and deep tanks all of which are epoxy coated. Four self-cleaning purifiers are installed. Only two are in operation at any given time and their capacity is such as to enable them to run at no more than 50 per cent of their rated output.

Fuel oil is pumped from the storage tanks to settling tanks, which have floating suctions, through 30 micron suction filters to the purifiers, thence the day tanks. Between day tanks and the engines the fuel passes through primary and secondary Winslow filters of 30 and 17 microns respectively and finally, prior to delivery to the engine mounted fuel pump, a further 30 micron filter, Fig. 10.

All fuel piping between the purifiers, day tanks and engines is of stainless steel.

In order to maintain continuous monitoring of the system, fuel sampling points are located between settling tanks and purifiers, at the purifier discharge, suctions from day tanks, between primary and secondary filters and immediately prior to entry to engines.

Early discussion with the engine manufacturers indicated that the engines could be run successfully on either a light distillate fuel or on a cheaper heavier waxy distillate. It was considered prudent however to commence operations with the high grade light distillate until it was certain that the engines were running satisfactorily. A time interval of approximately 4000 h was decided upon, before changing to heavier fuel would be considered.

As the heavier fuel would require heating for pumping and to obtain correct burning conditions, all fuel tanks were fitted with heating coils. Trace heating of pipe lines and jacketing of the oil filters was also provided to guard against any waxy deposition on these parts.

AUTOMATION AND CONTROL SYSTEMS

The vessels are automated to U.M.S. requirements. The propulsion controls are centralized in an air conditioned control room, together with the main switchboard and remote control systems for boilers, fuel transfer, bilge and ballast systems (Fig. 11). The control room is adjacent to but outwith the engine room itself. Main engine starting is only possible from the control room and interlocks are incorporated to prevent engine starts unless the machinery is in the correct state of readiness. Propulsion control employs a combined throttle/pitch/telegraph system which is duplicated on the bridge and bridge wings. Running control is normally maintained from the bridge, although over-

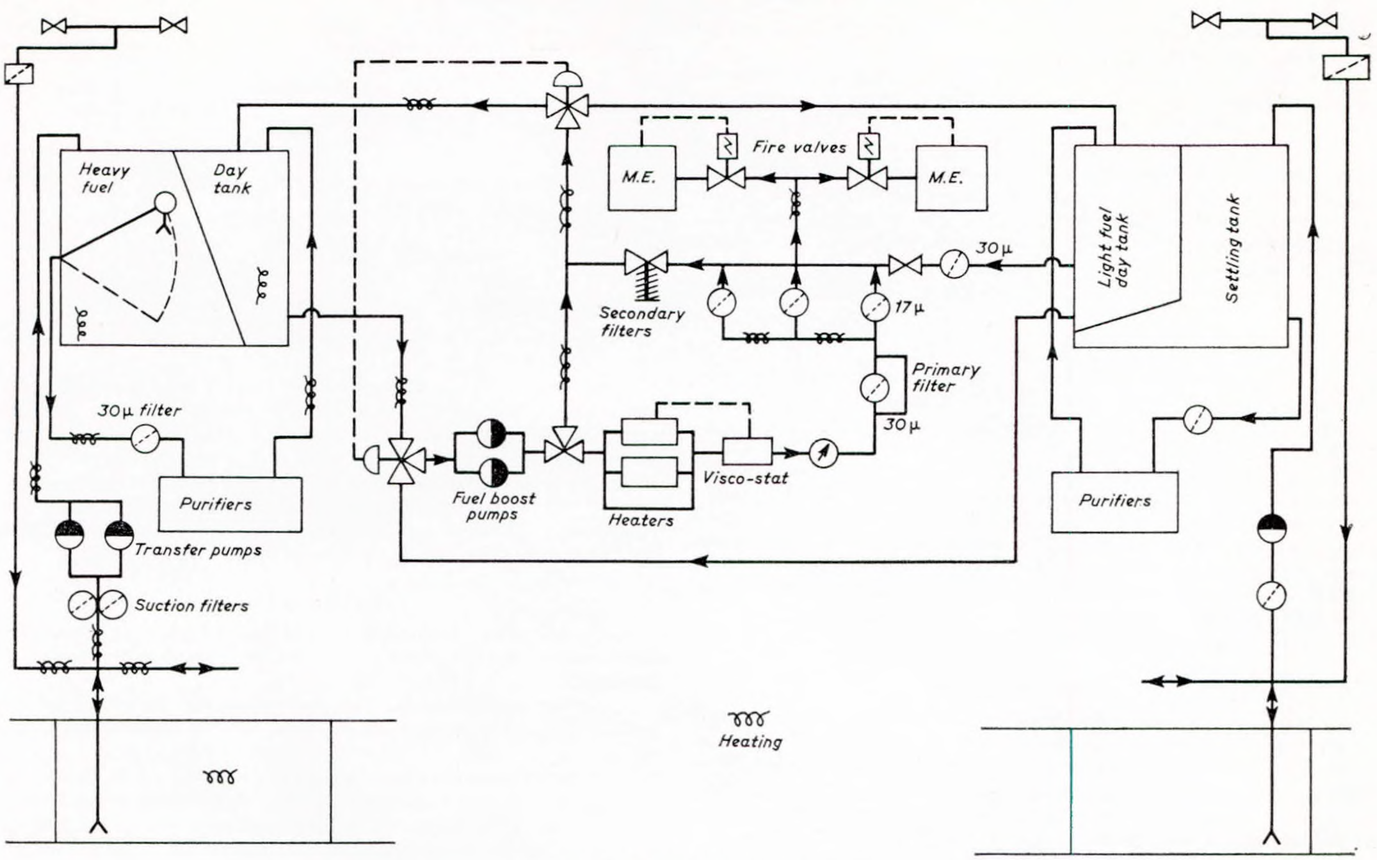

FIG. 10—*Fuel system*

riding control may be assumed by the control room at any time.

Both speed and power governing are applied to the gas generator and free turbine. During manoeuvring, a constant free turbine speed of 2000 rev/min is maintained with a comparable propeller speed of 75 rev/min. Ships' speed changes are by variation of propeller pitch only. On moving out of the manoeuvring range, ships' speed changes are achieved at constant propeller pitch with increasing rev/min. Gas generator power output is governed thereafter. Maximum free turbine speed is 3600 rev/min, giving a propeller speed of 135 rev/min.

FIG. 11—*Machinery control room*

Automatic fuel regulation to the engines is dependent on the operational mode, i.e. manoeuvring or full away condition. Fuel to the gas generators is regulated by electronic fuel controllers, one to each engine, and located in the control room. The controller positions an engine modulating valve which determines the amount of fuel allowed to pass to the engine fuel manifold.

The electronic fuel controller responds automatically to the following operational conditions:

a) compressor air inlet temperature;
b) gas generator exhaust temperature;
c) free turbine speed;
d) high compressor speed;
e) overtorque.

The fuel controllers also provide control shutdown function in the event of:

a) excessive exhaust temperatures;
b) failure to light off on starting;
c) flame failure while operating;
d) overspeed.

Other automatic shutdown controls include loss of lubricating oil, excessive vibration and fracture of accessory drive shaft.

A digital data processing system monitors the complete propulsion plant including gas turbines, reduction gears and c.p. propellers and gives a print out of all important parameters at pre-set intervals. Disturbance value printers record date, time, number and value of any alarm condition in addition to the setting off of audible alarms.

The main console contains an "on demand" digital display, adjacent to which is a mimic panel which allows of rapid location of any alarm condition. The mimic panel is of the darkboard type to enable any fault to be seen at a glance. Normally, with no alarm condition the panel is dark, the only lights showing being for the running hydraulic propeller pitch pumps and the reduction gear lubricating oil pumps.

Power to the console is at 25 V d.c. from two motor generator sets (one running, one spare) with a floating battery for emergency supply purposes.

The automatic propulsion control system for each engine is provided with a simulator which allows for a static functional check of the entire system and simplifies fault finding.

Bridge instrumentation includes gas generator and free turbine speeds and propeller pitch indicator. Engine emergency stop buttons are also provided. All instrumentation, in addition to the propulsion controls, is duplicated on the bridge wings.

ELECTRICAL SYSTEM

In line with the concept of maximum space utilization and minimum maintenance, shaft driven alternators of 1000 kW output were chosen for provision of electrical power requirements.

Shaft alternators are not of course new. What was unusual was the necessity of maintaining a constant voltage and frequency from an alternator which would operate over a speed range of from 2000 to 3600 rev/min. This was overcome by feeding the output to a static convertor system where the alternator output is rectified to d.c. inverted by thyristor control to a.c. at 60 Hz. A further 1200 kW alternator driven by an auxiliary Diesel is provided for port use.

SEA TRIALS

Sea trials on all three vessels were distinguished by their smoothness. Indeed, in retrospect the four-day trials of *Euroliner* were so uneventful as to be something of an anti-climax. It is difficult to say now why, except that in a project of this complexity, it seemed, to marine engineers at any rate, that a multitude of major problems would arise. Such "no confidence" thoughts were not shared by at least one aircraft oriented engineer, who was overheard to remark "What do they want to run trials for?" He was forgiven for that remark—later.

In the event, in the case of *Euroliner* the main problems which arose were associated with control functions which were cured with minor adjustments.

Vibration and sound levels outside the engine room were so low that apart from seaway movements, it would have been difficult to believe the vessel was at sea. Noise attenuation in the air inlet and exhaust ducting proved most effective and accommodation areas and decks were noticeably quiet even at maximum power levels.

Sound levels in the engine room were, however, higher than expected. This was not from the gas generators themselves, as the sound enclosures were most effective. The main offenders were identified as the shaft generators and the free turbine. A material improvement was subsequently affected by fitting splitters in the cooling air ducts of the shaft generators.

Trials performance of *Eurofreighter* and *Asialiner* followed the same pattern as *Euroliner* with no particular problems emerging.

In relation to the manoeuvrability of the vessels it is worth noting that during stopping trials *Euroliner* came to a dead stop in the water in 4·6 min with a stopping distance of 1·8 km (1·1 miles) or just under 7·5 ship lengths.

Later tests of *Eurofreighter* and *Asialiner* confirmed that the stopping time could be safely reduced to about 3·5 min, the governing factor in this respect being control of the windmilling effect as propeller pitch comes off in the ahead direction.

OPERATIONAL EXPERIENCE

The first of the class, *Euroliner*, sailed on her maiden voyage on 23 March 1971 and was followed by *Eurofreighter* on 6 August 1971 and *Asialiner* on 23 February 1972.

Voyage records at the time of writing are given in Table I.

TABLE I

	Euroliner	*Euro-freighter*	*Asialiner*
Hours at sea	5847	3700	1307
Distance in nautical miles (pilot to pilot)	141 490	85 300	31 500
Average speed, knots	24·2	23·1	24·1
Specific fuel consumption g/kW h (lb/shp h)	310(0·51)	310(0·51)	310(0·51)
Atlantic crossings	34	12	7

The above has been accomplished with average engine outputs of 80 per cent. *Euroliner* and *Eurofreighter* unfortunately lost almost two months of operational time because of the strike of longshoremen in the U.S.A. during the late Autumn of 1971.

Normal ports of call have been New York, Norfolk, Baltimore and Charleston in the U.S.A. and Rotterdam, Bremerhaven and Greenock in Europe. Le Havre, Hamburg and ZeeBrugge have recently been added to the schedule. Port turn round time has been between 8 and 36 h. Average crossing speeds have varied from about 21 knots to over 27 knots. The ships have repeatedly broken their own speed records, with *Euroliner* holding the overall record with 27·38 knots.

MAIN MACHINERY

The majority of mechanical problems which have arisen have been outwith the gas generators and will be dealt with later in the paper.

It must be emphasized that, by themselves, the gas generators have operated almost faultlessly. With two exceptions, detailed in the change out section, there has been no mechanical failure of any of the engines whether originally installed or replacements. Governing, control and supervisory systems, have proved themselves even under the most arduous Atlantic winter conditions, and the engines have operated entirely without distress. Each vessel, since leaving the shipyard, has operated continuously under bridge control, without any recorded failures. The manoeuvring ability of the vessels, and engine response under river or heavy traffic conditions has proved quite remarkable.

Engine Stoppages

To date the *Eurofreighter* and *Asialiner* have suffered no complete stoppage at sea, while *Euroliner* has accumulated a total of only 12 h unscheduled stoppages. Individual engine stoppages as opposed to total ship immobility have been greater but due to high ship's speed on one engine of some 20 knots, ship schedules have not been seriously affected.

The longest individual engine stoppage was due to failure of the exhaust gas elbow of the port unit on *Euroliner*. Discovery was by leakage of exhaust gas to the engine room, which was found to emanate from a compressive fracture of the relatively light exhaust elbow. The elbow is of fabricated stainless steel with a wall thickness of 1·5 mm (0·06 in). Investigation showed that a fault in alignment between the elbow and the adjacent, and heavier, exhaust trunking had impaired and restricted their mutual free expansion to the disadvantage of the lighter exhaust elbow. The fracture can be seen clearly in Fig. 12.

Adequate temporary repairs were carried out without delay to the vessel. Subsequently, during drydocking, a new elbow was fitted concurrent with a modification to the elbow/trunk interface. A design alternative is being progressively introduced on all units. The repaired elbow has been retained as a spare.

Other engine stoppages at sea have been due mostly to electronic fuel controller malfunction, either because of component failures or faulty or drifting settings resulting in automatic shut down.

Engine Change Outs

At the time of writing no gas generator has exceeded 2500 h running without requiring to be changed out for repair. This is significantly less than the original target figure anticipated between routine overhauls. While to some degree this shortfall has been due to other causes such as foreign object damage and "external" defects, the prime reason is unquestionably the

FIG. 12—*Fractured exhaust elbow*

deterioration of nozzle guide vanes and turbine blades occasioned by salt ingestion.

Euroliner has had seven change outs to date and *Eurofreighter* four. *Asialiner* is still operating on her original engines. Of the eleven change outs, four were unscheduled. Two were necessary because of foreign object damage, one because of damage sustained by overheating caused by an incorrect assembly during routine overhaul, and one on account of an accessory drive shaft failure. The remaining seven were planned for study of sulphidation effects. Fig. 13 shows a gas generator change out in progress.

Unscheduled

The first unscheduled engine change out occurred in June 1971 after 1207 h running and was due to foreign object damage to the starboard engine of *Euroliner*, sustained during water washing of the compressor. A metal cased electric torch was inadvertently dropped into the compressor intake and although the body was thrown clear by the rotating blades, the metal base and a battery passed into the compressor. It was necessary therefore to change out the gas generator in order to open it up for damage assessment and recovery of the missing parts.

After removal and strip down the damage was seen to be slight and confined to a number of first stage L.P. compressor blades. The correction work consisted only of dressing up or "blending" the affected blades then testing for balance. Inspection of the first stage turbine nozzle guide vanes and turbine wheels however revealed more serious damage. Corrosion or sulphidation had occurred affecting the leading edges of some 90 per cent of the nozzle guide vanes.

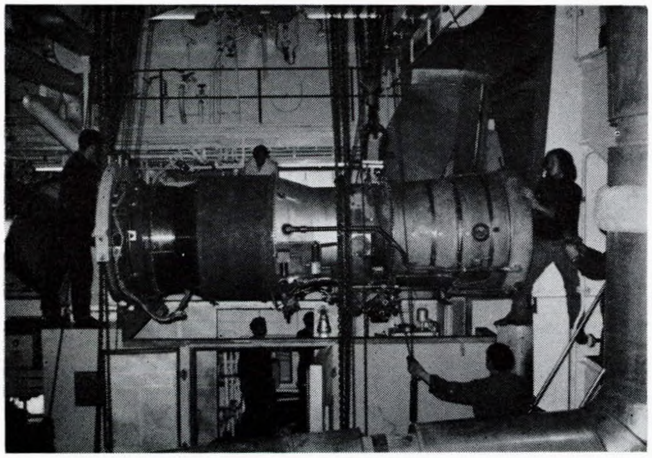

FIG. 13—*A gas generator change out*

Out of 80 first stage nozzle guide vanes, 69 had sections of coating missing from their leading edges, exposing the base metal. The missing coating varied in length from about 6 mm (0·24 in) to the full length of the vanes.

Considerable sulphidation of the outer surface of the first stage turbine blade shrouds was evident, and corrosion was also commencing on the underside of the shrouds. Second and third stage blades and vanes however showed little sign of sulphidation, only first stage guide vanes and blades being affected. The parts could at this stage undoubtedly have given further service but the opportunity was taken to renew a high percentage in this area to allow for material (coating) updating and laboratory assessment of the damaged parts—a high proportion of which were, as a matter of interest, subsequently restored to a useable condition.

An examination of the port engine indicated a similar condition to that obtaining on the starboard engine, and led to a planned change out at just short of 2000 h operation.

The second unscheduled change out took place in August 1971 during the maiden voyage of *Eurofreighter*. In this case severe damage had been occasioned to almost all stages of the compressors of the starboard engine by the shanks or "tails" of pop rivets. These rivets had been used to attach metal cladding to the access door in the air intake ducting, immediately above the "Power Pac" enclosure roof. The lower edge of the door seals against a heavy rubber joint which extends along the aft end of the enclosure roof. The arrangement can be seen in Fig. 14.

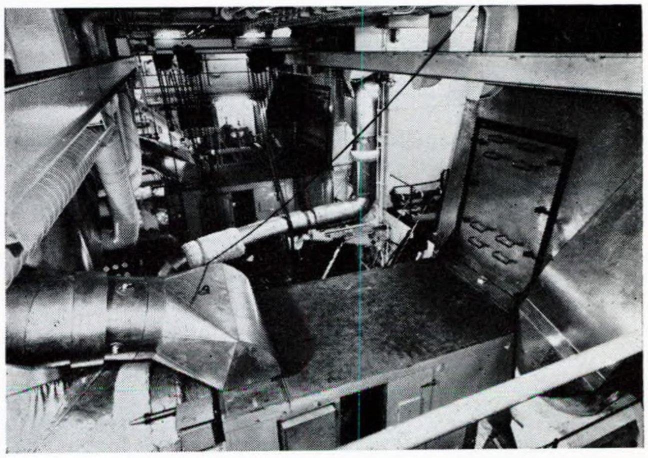

FIG. 14—*Engine room view and air ducting access door*

It was thought that during erection, a considerable number of pop rivet shanks, which are broken off after fitting, had been allowed to fall, and had rolled out of sight under the access door. Due to a faulty seal these shanks had been sucked into the engine, causing the severe damage referred to.

It is a sobering thought that the initial inspection, which was carried out during a routine plenum chamber and compressor intake check, showed only a number of small circular nicks in six first stage compressor blades and gave no hint, at least to the new "marine aviators", of the extensive damage which had been sustained further down the compressor. Thus is experience gained!

Boroscope holes in the gas generator casing enable examination of compressor conditions at the sixth, ninth and fifteenth stages. In this case sufficient damage was observed as to make change out essential.

On strip-down, 9 stator vanes and 28 blades of the low compressor, and an astonishing 76 stator vanes and 162 blades of the high compressor had sustained damage. An indication of the type of damage sustained is shown in Fig. 15 which shows a section of the ninth stage compressor blading. The explanation lies in the fact that the low compressor rotates at about 6000

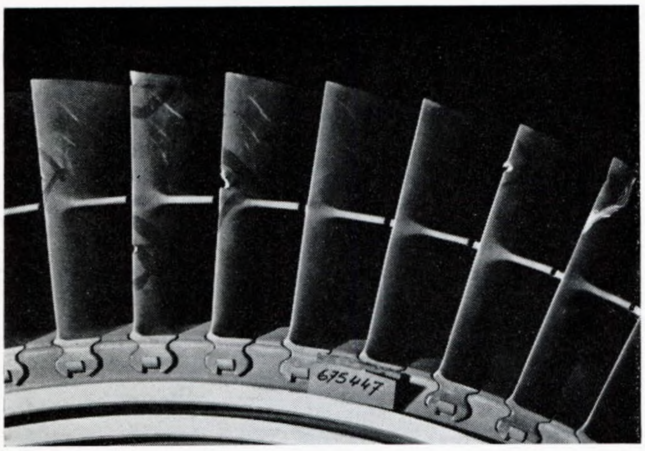

FIG. 15—*Foreign object damage to 9th stage compressor blades*

rev/min whereas the high compressor runs at over 8000 rev/min. A foreign object or objects, depending on size of course, can "snake" through the low compressor causing little damage. On then entering the high compressor with its much greater speed the "rhythm" is lost and considerable damage can ensue. Although a number of renewals were necessary, many of the vanes and blades were only slightly damaged and could be blended without impairing future performance.

From that experience, little more need be said about the potentially disastrous results of foreign objects finding their way into the compressor.

The third unscheduled change out occurred in *Euroliner* in March 1972 and was due to a failure of turbine nozzle guide vanes. Damage was very extensive, not only to the compressor turbine but also to the free turbine necessitating change out of the complete engine unit. From initial examination it would appear that the most likely cause was an incorrectly assembled nozzle securing ring which had blocked off cooling air to the turbine first stage nozzle guide vanes, and resulted in the overheating and failure of 17 vanes. It is interesting to note that the engine had completed 1890 running hours before the failure occurred.

The fourth unscheduled change out was in May 1972. This involved the starboard engine of *Euroliner* and was occasioned by a drive shaft bearing failure, which led to a total loss of power to the underslung accessory gearbox of the gas generator. This failure is currently under investigation by the engine builders. While it necessitated an engine change out, it is perhaps worth noting that although the gas generator lubricating oil pump was among the essential services "lost" due to failure, no engine damages were suffered comparable with what would be anticipated in a more traditional plant.

TABLE II

Date	Location	Running Hours
Euroliner		
10.7.71	Port	1970
14.9.71	Stbd.	1641
13.11.71	Port	1664
12.3.72	Stbd.	2525
Eurofreighter		
28.12.71	Port	1503
13.3.72	Stbd.	2447
9.5.72	Port	2300

Scheduled

Between them *Euroliner* and *Eurofreighter* have had seven scheduled change outs as shown in Table II.

In all cases the change outs were due to sulphidation of hot section parts including nozzle guide vanes, leading edges and shrouds of turbine blades. No distress has been apparent on any engine compressor blades. Fig. 16 shows a typical sulphidation attack on first stage turbine blades after 2500 h running.

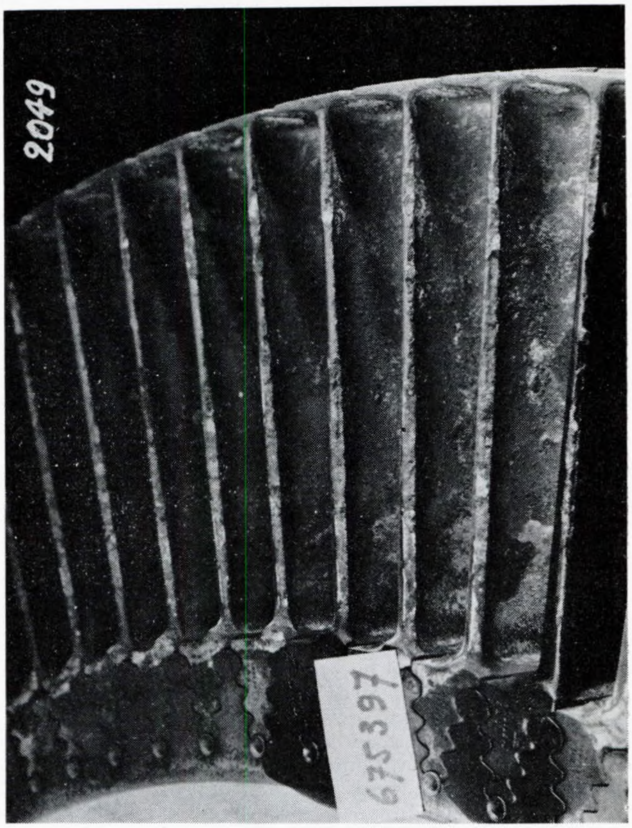

FIG. 16—*Typical turbine blade sulphidation*

It must be emphasized that these engine change outs have been of a precautionary nature, and made well before the danger point which may have led to blade failure. In many cases the affected parts have been re-coated and returned to service.

Neither ship has been held up at any time because of engine change out. The average time taken has been about 10 h, and on the one occasion that both gas generator and free turbine had to be changed the total time was 18 h.

Free Turbines

With the exception of the one damaged by the nozzle guide vane failure in March 1972, the original turbines remain in use in each ship. No operating problems in this area have arisen and the free turbines are in an as new condition.

Gearing

Because of the high loading of the primary pinions and wheels, particular attention has been paid to the gearing on each ship by regular examinations. They remain in excellent condition, however and, other than the replacement of a secondary pinion bearing discovered at *Euroliner*'s drydocking to have cracked white metal, the gears have given no trouble whatsoever.

C.P. Propellers

The c.p. propellers have performed well in all circumstances. They have responded perfectly under manoeuvring and under sea conditions and have amply justified their selection. A few early problems occurred, notably overheating of the hydraulic oil, overcome by incorporating a small oil cooler in the system, and failure of hydraulic pump thrust bearings, cured by a design modification. Some control system failures have also occurred, mostly of a minor nature, and easily put right.

Shaft Alternators

Apart from a few bearing oil leaks, neither the alternators nor convertor and invertor systems have given any trouble.

Automation and Control Systems

Considering the extent and complexity of the control and automation systems they have been remarkably free from defect. Faults have been minor only, mostly caused by component failures or printed circuit cards which have been quickly located and replaced. Undoubtedly this reflects the tremendous care taken in pre-assembly, testing and checking. For each ship all of the equipment was first assembled at the manufacturers plant under clean conditions and complete simulation and function tests carried out. Apart from subsequent component failures, the check outs at this stage eliminated many possible fault sources before shipboard installation.

Fuel Quality and Handling

Care taken in fuel handling, purification and filtration has been amply repaid in that hot section inspections have shown the fuel nozzles to be completely free from deposits.

For initial operations the light distillate fuel supplied conformed to the following specification:

Viscosity, cS at 38°C (100°F)	max 3·0
Sulphur, per cent	max 1·0
Ash, per cent	max 0·005
Sediment, mg/litre	max 6·3
Free water content, per cent vol	max 0·01
Metals contamination	
Vanadium	0·1 ppm wt max
Sodium	0·1 ppm wt max
Potassium	0·1 ppm wt max
Calcium	0·1 ppm wt max
Lead (Pb)	0·1 ppm wt max
Copper	0·02 ppm wt max

Fuel is supplied by barge in both the U.S.A. and Europe. A barge and pipeline inspection procedure has been set up at both ends, using independent consultants, to ensure complete cleanliness before loading. Millipore and Aqua-glow tests are carried out on board ship as a guide to sediment and water content. Test samples are drawn from the 5 points enumerated in the fuel system section earlier in the paper, and duplicate samples are sent ashore each voyage for analysis.

Although all indications were that fuel purity was being maintained the main primary and secondary filters were removed from *Euroliner* after four months operation, for examination. Element contents were found to be negligible, confirming test results. Routine checks continue to be carried out but no further filter changes have been necessary on any vessel.

Due to the satisfactory operation of the light distillate fuel a change over to the heavy distillate was made in mid-January 1972. The heavy fuel specification is:

Viscosity, cS at 38°C (100°F) max	11·0 max
Sulphur, per cent wt	1·3 max
Carbon residue, per cent	0·10 max
Ash, per cent wt	0·01 max
Pour point, °C (°F)	24 (75) max
Wax forming temperature, °C (°F)	46 (115) max
Sediment, mg/litre	9·5 max
Free water content, per cent vol	0·01 max
Metals contamination, ppm	
Vanadium	0·2 ppm wt max
Sodium plus potassium	0·6 ppm wt max

In using this fuel, care must be taken to maintain temperatures at all points in the system above the fuel cloud point, to avoid wax formation which could lead to choked filters and fuel nozzles.

So far no particular problems have been encountered nor has any deterioration of gas generator performance been noted.

Maintenance

At sea, maintenance consists of routine inspection for fuel or lubricating oil leaks and any evidence of abnormality.

In-port maintenance includes minor and major inspections. During minor inspections, all exposed wiring and external accessories and tubing are checked for security of mounting and evidence of leakage or chafing. Engine flange joints and cases are checked for evidence of leakage or distortion which would indicate internal discrepencies. The inlet, exhaust and accessory gearbox areas are checked for indications of abnormal conditions. Oil filters are removed, disassembled, inspected, cleaned and reinstalled or renewed.

At scheduled intervals a major in-port inspection is carried out. This inspection is called the hot section inspection (h.s.i.) and includes all the requirements of the minor inspection, with the addition of an inspection of the engine combustion section, by unbolting the burner case and telescoping it aft over the turbine case. Removal of the combustion cans permits inspection of the fuel nozzles, fuel manifold, first stage nozzles guide vanes and first stage turbine blades.

After the first 1000 h, hot section inspections were scheduled for 3000 h intervals. It has not been possible to achieve this because of the necessity of maintaining a close check of the rate of nozzle guide vane and turbine blade sulphidation. H.S.I.'s are being carried out meantime at intervals of about 500 to 1000 h depending on conditions found. It is not a particularly arduous job however and can be carried out by two men in four hours.

Water washing of the compressor blades is also carried out in port at regular intervals. The process consists of running up the high pressure compressor by means of the starter to a speed of about 1800 rev/min when distilled water is injected into the compressor. The starter is turned off and the rotors allowed to decelerate to rest. The process is repeated four times and finally the gas generator is fired up and run at idle for 15 min to dry the engine thoroughly. The total time taken is about 40 min.

One unexpected item which caused a great deal of trouble, particularly in the early life of *Euroliner*, was the continuous failures of the electrostatic precipitators used to reclaim the synthetic lubricating oil from the engine breather system. Their failure to operate correctly resulted in continuous emission into the engine room of oil vapour. Much time and effort was spent in making modifications of placement and drainage arrangements, before it was discovered that the transformer feeding the precipitators was set to the wrong voltage. Since this was corrected no further trouble has been reported.

Fig. 17 illustrates the breakdown of recorded hours of maintenance work including change outs, attributed to main propulsion machinery and support equipment on *Euroliner* and *Eurofreighter*.

Gas generator change outs have provided the major work load, particularly on *Euroliner* which has also suffered a free turbine change out, while hot section inspections have also taken up considerable time.

The electronic fuel controllers have proved the most common continuous work load on *Eurofreighter*, whereas *Euroliner* has had relatively few problems in this area.

A point of interest is that a spare fuel controller is fitted to each vessel and pre-set so that it can be coupled into either engine in the event of a failure.

Actual v's Projected Maintenance

It is interesting to note the actual as compared with the engine manufacturers projected maintenance time scale as shown by Fig. 18. The effects of the additional work load caused by hot section part sulphidation (i.e. additional change outs, extra h.s.i.'s) can be clearly seen. If it were not for this, the vessels would be well within the projected work load.

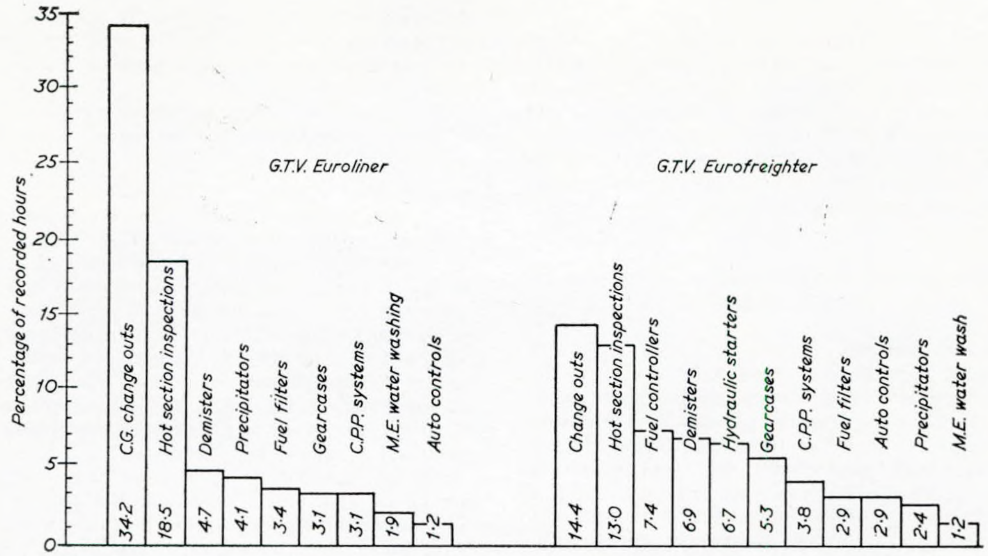

FIG. 17—*Propulsion plant maintenance*

Maintenance Summary

The maintenance load is so relatively low it cannot be compared to that obtaining on a conventional propulsion plant, especially at the power levels involved. Granted, major overhauls are carried out ashore. Even so, all work in relation to the power plant including change outs is light and of a clean nature (not a hammer or chisel in sight!)

The type of maintenance does, however, impose its own special conditions. Each maintenance task demands the utmost in diligence and observation, whether it be the condition of a fuel filter, examination of the plenum chamber or of the compressor inlet, where even a nick in a first stage blade could be an indication of serious trouble further down the compressor as was clearly demonstrated in the case of the *Eurofreighter* "pop rivet" engine.

SALT INGESTION AND DEMISTERS

Salt ingestion and the consequent damage to the combustion and blading areas of the gas generators is by far the greatest single operational difficulty encountered.

As mentioned earlier, the first indication of the salt ingestion problem was the discovery of sulphidation, later confirmed by laboratory tests, of nozzle guide vanes and turbine blades of the foreign object damage (torch) engine turned out in June 1971. Subsequent engine examination and change outs confirmed this as a serious problem. Re-examination of the demister arrangement led in September 1971 to:

a) improvement of the installation in the sealing of previously undetected air leaks around the demisters;
b) alteration of the drain arrangement from a cascade system, to direct drainage through a loop seal;
c) the fitting of anti-splash/reduction plates on the demister drain troughs;
d) isolation of demister drains from a common deck drainage system to which they were originally connected;
e) the establishment of routine chemical cleaning of demisters after every crossing.

Items (b) and (c) were the result of thoughts that the high velocity of the air entering the demister banks was resulting in

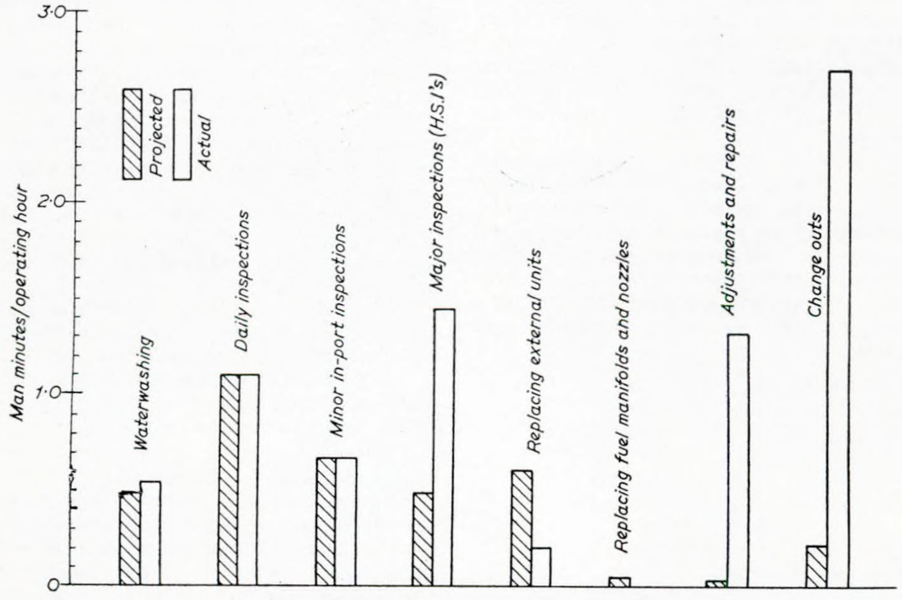

FIG. 18—*Projected V's actual maintenance time scale*

re-entrainment of water from the drain collectors. Item (d) was carried out because it was thought that "backing up" of drainage water could occur while (e) was on advice of the rapid fall in efficiency which would occur if greasy deposits were present on the demister vanes.

Inspections during the first few months after the modifications appeared encouraging, and this was apparently confirmed by tests which were undertaken by the engine builder. The picture altered significantly as the year closed. As operations moved into 1972 it became abundantly clear that a major problem still existed.

The service experienced has shown that in the separation action of the demisters, a significant proportion of the particulate matter impacting on the vane surfaces adheres thereto as a dry crystalline salt deposition and can not only impair the critical vane profile, but could build up to a point where it can be dislodged, to be carried by the airstream to the engine with adverse results. To a limited degree this is contained by rigorous in-port washing, coupled with a chemical cleaning or spray to offset any unavoidable oil type deposition. Currently, experiments are under way at sea using a fixed fresh water spray not necessarily in large amounts, to wash out and drain away such impacted depositions daily.

Another factor which this application has highlighted is that an inertial type demister, whether the vanes be of the hook or of the corrugation family, is not a device for which high efficiencies can be claimed when the particle sizes are small. In a range of 1·5–4 micron particles, the demonstrated removal efficiency cannot in fact be considered as more than 30 per cent—whereas in the larger particle range of about 12–100 microns, removal efficiencies of between 95 and 99 per cent are observed fact.

Recent tests carried out under normal conditions on *Euroliner* indicated that whilst the salt concentration of the incoming air ranged from 0·028–1·287 ppm by weight, that of the treated air leaving the demister ranged from 0·007–0·014 ppm. Particle analysis or distribution was assessed using Casella Cascade impactors before and after the demister in question. A typical distribution chart is as shown in Fig. 19.

To overcome the "residual" problem, in addition to the daily demister washing previously mentioned, experiments are being conducted with post demister air filtration using a low pressure drop filter screen having electro-static properties. The results, and it must be stressed that these are still in the category of initial impressions, are encouraging. One important factor with this type of air filtration, as indeed with the alternative "in depth" type of filter in such an application, is the danger that any such device can, in certain conditions, as for example in freezing fog, be liable to dramatic and rapid increase in pressure drop which could have serious repercussions, one of which could be the partial collapse of the filter media with subsequent ingestion by the engine. This particular danger and others associated with it can however be guarded against by a swing open function of the secondary filter coupled with pressure sensors mounted on either side thereof which would both give the alarm and simultaneously control engine shut down.

Design Observations

Gas generator change outs have always gone well and no significant problems have presented themselves. An average time of ten hours for the operation has been quoted and this is very commendable. Nevertheless with a few modifications, particularly in the handling arrangements, it is felt that this time can be cut by something like three hours.

Change Out Arrangements

Because of the trading pattern, there is no necessity for the vessels to carry spare gas generators on board. This means that during change outs, engines must be removed and replaced through the door leading from the engine room to No. 8 hold. Discharge of containers in the way of the door is therefore necessary before this can be done, unless of course discharge/loading operations can be phased in with the change out operation.

A further difficulty is that lifting or lowering a gas generator out of or into the hold requires the use of a shore crane which can be, at times, quite inconvenient.

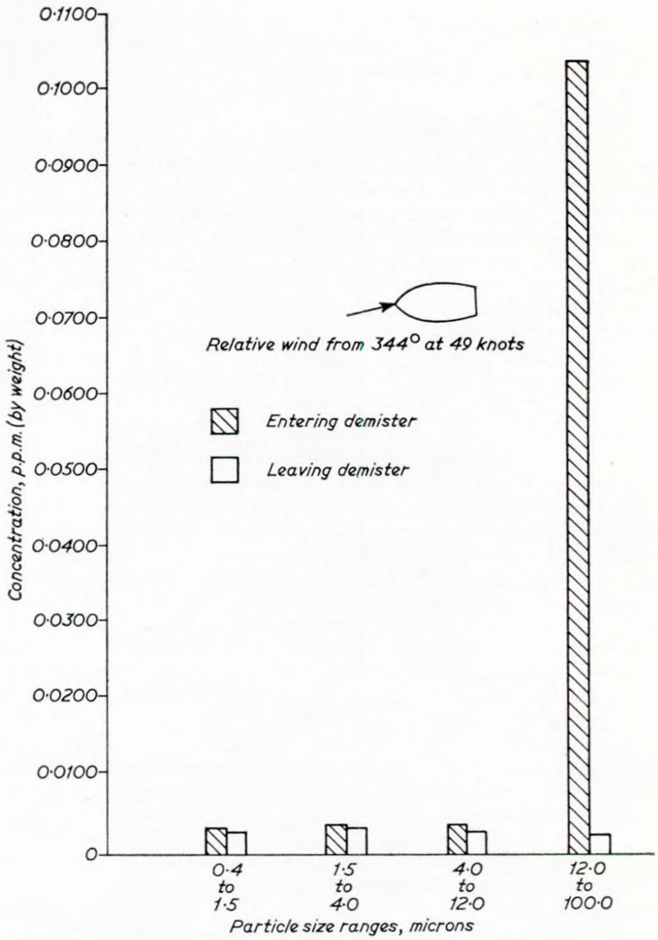

FIG. 19—*Particle size distribution for engine inlet air on G.T.V.* Euroliner

Considering that a gas generator is only about 3·6 m (12 ft) long with a diameter of 1·2 m (4 ft) an alternative means of removal would have been most welcome, even allowing for the fact that the engine room is "roofed over" with container and accommodation spaces.

The Power Pac concept has proved itself to be ideal, and although a faulty Power Pac/plenum chamber seal resulted indirectly in foreign object damage, alteration of the arrangement was a simple matter. Improvements could also be made in sound attenuation by extending the acoustic enclosure to include the free turbine as well as the gas generator.

Intake and Exhaust Ducting

Recent studies have indicated that the inlet and exhaust systems could be incorporated in the same casing. The penalty would be an additional pressure loss of about 3·7 mmHg (2 in H_2O) which is a small price to pay for the additional freedom and flexibility granted to the designer by the extra space availability.

Fuel

The fuel system has been well thought out, as proved by the results, and it would be difficult to suggest any improvements.

Instrumentation

There is frequently a tendency on highly automated vessels either to over-instrumentate or provide an array (disarray?) of gauges which confuse rather than inform. This is not so in *Euroliner* class vessels where instrumentation and layout, from an operational point of view, are all that could be desired—perhaps this is a spin off from aircraft practice where compactness and relevancy are paramount.

Technical Co-operation

It is felt that the overall design success is primarily due to the co-operation of all the principals involved. Once the decision was taken to build, and recognizing that this was a unique venture, a design team, representative of all parties including owners, operators, charterers, shipbuilders, engine and automation manufacturers, etc. was formed. This team functioned to ensure as far as possible the best engineering, economic, and operating solutions for the many problems which would arise, by pooling their individual knowledge for the benefit of the project. The value of the team is apparent in the final ship design, construction and operation.

PERSONNEL

In the belief, confirmed by experience, that the operation of high powered gas turbine vessels would be entirely different from that of conventional installations, selection of personnel received extensive consideration. Although chosen for past experience, intelligence and attitude, it was considered most important that each man be receptive to new concepts and under no circumstances be hindered in his outlook by past practices or traditions. This was not confined to the engineering department. Equal importance was attached to the selection of navigating officers, who would be intimately involved because of the unique character of the operation and had to be aware of the ships' capabilities in terms of manoeuvring characteristics, high power availability and ship handling at high speed.

The officers have contributed considerably to operational success and, in this respect, the time and money spent in extensive training has proved to be invaluable.

The staff have shown themselves fully capable of carrying out all duties required of them including condition monitoring, maintenance and inspections. In addition all change outs have been carried out entirely by ship's staff.

CONCLUSIONS

While recognizing the economic factors involved, the aim has been to present an operational appraisal, rather than economic justification of gas turbines. The project involves total economics, which includes number of voyages per year, number of parts serviced, number of containers carried, etc.

Apart from operational costs, the gas turbine contribution to economic validity lies mainly in reduced first cost and reliability of operation. The validity of both contentions has been, in the authors' view, completely proven.

In the overall plant conception however, the only outstanding barrier to fulfillment of initial design expectations is the excessive salt ingestion currently experienced. The authors are confident that the problem will be solved in the near future and the plant enabled to reach its full potential.

Undoubtedly second generation gas turbines will give better performance in terms of fuel economy and time between overhauls and will challenge the more conventional prime movers, at least for specific applications.

ACKNOWLEDGEMENTS

The authors wish to acknowledge the help and co-operation of Pratt & Whitney and Rheinstahl Shipyard in providing some of the illustrations used, and thank J. & J. Denholm (Management) Limited for permission to publish the information contained in the paper.

REFERENCES

1) ZEIEN, C., 1970. "Application of the Gas Turbine to Main Propulsion of Merchant Ships", *Trans. I.Mar.E.*, Vol. 82, pp. 193–209.
2) CARPENTER, D. B., HOLBURN, J. G., and O'NEILL, D. A., 1971. "System Integration of G.T.V. *Euroliner* from Conception to Operation". S.N.A.M.E. New York Met. Section, September.
3) MCALLISTER, P. J., 1972. "Modularisation and Installation of the Gas Turbine Propulsion System in *Euroliner*". A.S.M.E., San Francisco, March.
4) MATHEWS, D. B. M. and HODGSON, J. R. F., 1971. "Sea Trials of Gas Turbine Machinery in H.M.S. *Exmouth*". *Proc. I.Mar.E. Conf.*, 7/8 June, p. 80.

Appendix

Between writing and presentation of the paper, the fourth ship of the series, *Asiafreighter*, has come into service. Updating figures given, *Euroliner* has now steamed for 7250 hours and covered a distance of 284 850 km (177 000 miles), *Eurofreighter* 4150 hours and 168 340 km (104 600 miles), *Asialiner* 2340 hours and 113 460 km (70 500 miles), *Asiafreighter* 1800 and 72 420 km (45,000 miles).

Five further engine change outs have been necessary. The first was an engine which had completed 2525 running hours, and was due to a leakage of sea water from the lubricating oil cooler into the gas generator lubricating oil system. A subsequent check of system pressures showed that the water side pressure had been higher than that on the oil side. The system was therefore modified by judicious use of orifice plates to reduce the water pressure.

Another engine failed because of the fracture of a second stage gas generator turbine blade. Extensive damage was caused to the third stage turbine and the free turbine, necessitating the change out of both gas generator and free turbine. At the time of failure the gas generator had logged 2731 hours running time. This failure is currently under investigation.

The remaining three gas generators were changed out for reasons of sulphidation.

With respect to the third unscheduled change out on *Euroliner* referred to in the paper, it was stated that from initial observations it appeared that failure of turbine nozzle guide vanes had been due to overheating because of an incorrectly assembled nozzle securing ring. Further evidence indicates that this is not necessarily true. The incorrectly assembled securing ring did obstruct the path of cooling air through the vanes, but detailed examination of the failed nozzle guide vanes does not now support the original theory. Fig. 20 shows three guide vanes which fractured at the securing platforms. The fractures can be clearly seen at the leading edges immediately adjacent to the cooling passages. All seventeen guide vanes were affected in an identical manner. Unfortunately the results of laboratory examination of these vanes is not yet available, and at this stage, therefore, it is inadvisable to speculate on the exact cause of failure.

WATER WASHING

Water washing as described in the paper has now been extended beyond the compressors to the turbines themselves to ensure direct impingement washing in that area. The means of doing this is to inject distilled water through the secondary fuel system, through the fuel nozzles, to impinge directly on the hot turbine parts. The process is carried out in the same way as for the compressors, i.e. by cycling the gas generator up and down by means of the starter.

THREE-STAGE DEMISTERS

It was mentioned in the paper that experiments were being carried out with post demister air filtration. The final configuration has been decided upon and all vessels are now being modified to incorporate a three-stage arrangement, illustrated in Fig. 21. The original air intake system is shown at (a) with

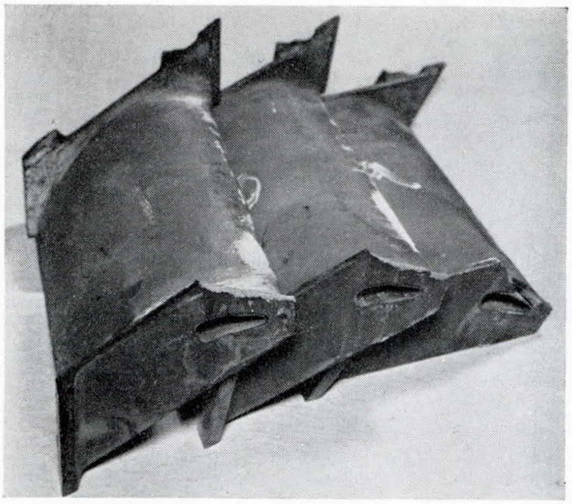

FIG. 20—*Damaged first stage turbine nozzle guide vanes*

single stage demisters of the chevron type.

The modified system now being fitted is that shown at (b). In this arrangement the original chevron type demisters have been moved back from the intake to form the third stage. They are preceded by electrostatic filter screens with a new bank of demisters of the hook type mounted at the mouth of the inlet as a first stage.

HOOK AND CHEVRON VANES

Illustrated by Figs. 7(a) and (b) are hook and chevron vanes respectively. One of the main advantages in using the hook type as the initial stage demister is that its geometry, as opposed to that of the chevron type, is of relatively large scale, thus the inlet should be less susceptible to loss of efficiency due to the lodgement thereon of crystallized salt or oil borne dust particles.

The decision during the initial design stages to use the chevron demister was based upon the belief then held that the hook could not maintain its efficiency at the air speeds at which this particular plant operates. In the intervening period, design has moved forward and with changes in throat to length ratio, form of hook and form of entry or exit, the designers have now hopefully overcome this particular demerit of the hook.

The second stage consists of light alloy frames which support sheets of a plastic material which has electrostatic properties. It is not intended as a filter, but rather as a means of coagulating the minor particles of water which have escaped the first stage and of presenting these to the final third stage in large micron formation within the high efficiency range of the chevron type demister operation.

The second stage screens are mounted directly on, and are supported by, the third stage units. Hinged manhole covers fitted below the demister chamber allow easy removal of the screens for cleaning and inspection.

Pressure sensing probes are mounted before and after the total assembly and are connected to the engine alarm system.

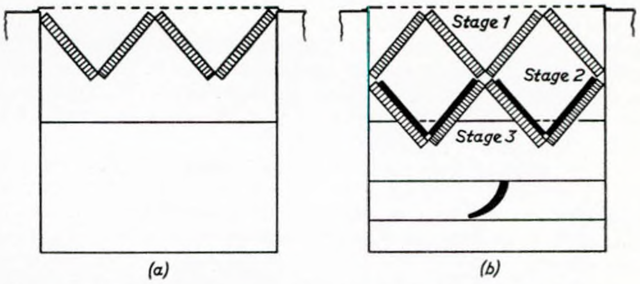

FIG. 21—*Original and modified demister arrangement*

On units so far fitted and in service, pressure drops across the combined three stages of the demister are within 11·2 mm Hg (6 in. H_2O), which is a modest penalty to pay in view of the added protection.

Evaluation of the new arrangement will obviously take some months, but it is revealing that on the most recent engine inspection, where a vessel had been operating for 1250 hours with an interim two-stage arrangement, no sulphidation was evident.

FUEL ADDITIVES

Another evaluation programme now being introduced in an attempt to overcome the sulphidation problem, is the use of fuel additives on a limited number of engines. One of these is what might perhaps be termed a traditional material which aims at raising the ash deposition temperature, whilst the other repesents an entirely new approach to the problem by the research laboratory of the engine builder. Development of this latter product or system has been spread over several years of laboratory work, the results of which have been most encouraging and has only now been offered for field assessment.

The philosophy behind this new approach is that the principal corrosive agent responsible for the hot corrosion is condensed sodium sulphate, formed as a result of reaction between the ingested sea salt and sodium dioxide, which is a product of combustion of the fuel. The corrosive properties of sodium sulphate are very significantly attenuated by the presence of certain oxides, specifically those of chromium, tin, samarium and columbium. The common characteristics of these compounds are that they can all exist in more than one valency state and that at elevated temperatures form compounds with sodium which are more stable than sulphate, thus it is reasoned the key to effective sulphidation inhibition involves the provision of these oxides which react with alkali metal salts to form stable alkali metal derivatives.

COATINGS

No discussion of the problem of sulphidation would be complete without at least some reference to the question of protective blade coatings. It is very tempting to look in that direction for assistance. The authors do indeed look there with hope and it is known that the engine builders have a very extensive and continuing research programme slanted in that particular direction. Changes or improvements are in fact introduced from time to time, but any radical change must await some significant metallurgical breakthrough—hence the efforts in the various other directions which the authors have outlined.

Discussion

COMMANDER T. R. SHAW, R.N., M.I.Mar.E., opening the discussion warmly congratulated the authors for a most stimulating paper on a very "with it" subject. Their company, too, deserved commendation for having the courage to take the bold step which had now shown itself to be commercially successful as well as mechanically interesting. The paper was not one about "jam tomorrow" but "jam today", which was something encouraging and cheerful to which to listen. *Euroliner* and her sister ships worked. To engineers what was more interesting perhaps was why did they work, or could they be made to work even better? With such a wide range of interests represented in the audience, the discussion would no doubt probe and comment on all aspects of the paper.

It was very natural that great interest in the paper would be felt, among others, by the Royal Navy. The Royal Navy had been operating gas turbines of one form or another in warships for some twelve years; more recently they had put to sea ships driven by marinized aero gas turbines, such as those described in the paper. Many more had been launched and in a few years they would have a largely gas turbine navy. The power of *Euroliner* was similar to that of H.M.S. *Sheffield* and other new naval ships.

The pressure drops in the intake and uptake ducting were comfortably low, indicating that the air velocities and the energy dissipated in the ducting were not excessive. Nevertheless, he noticed that the exhaust duct changed shape as well as direction many times in a way that would horrify the writers of aerodynamic textbooks. Could the authors confirm that they did not experience any severe buffetting or vibration in their uptakes? Were there any difficulties, for instance, with the silencer fixings?

It was interesting that *Euroliner* had experienced severe corrosion in the turbines, in spite of the careful attention paid to the design of demisters. The Navy also fitted vane-type demisters in its current ships and, like the authors, had been developing improved versions.

In present ships the vane separators were followed by a pack of knitted mesh to coagulate the very small particles which passed through the vanes. A more recent naval design, which had undergone comprehensive testing by the Naval Marine Wing at NGTE would be fitted in future ships. He referred to that point because it might be interesting to compare that with the authors' ideas. It consisted of three stages (see Fig. 22). First a vane separator, similar to the authors' Fig. 7(a), to catch the large water droplets in the air and any spray which might reach the intake. Then came stage two, consisting of felt pads which did not aim to remove any water, but only to coagulate the very small particles to such a size that they could be removed by the second vaned demister which formed stage three. The demister was constructed in one standard size, about 1·8 m × 1·0 m (6 ft × 3¼ ft) for one of the units. The units were installed in groups, as would be seen from Fig. 23; so many for an Olympus engine and so many for a Tyne engine.

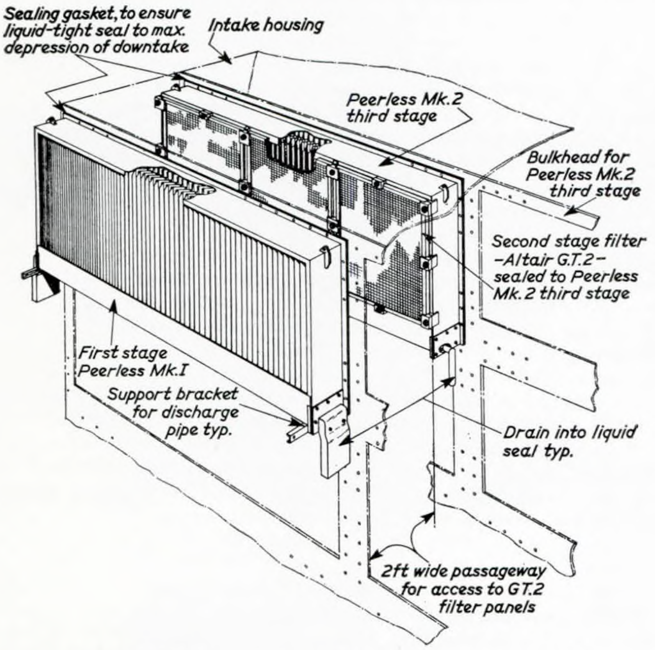

FIG. 22—*Three stage separation system module*

The figures the authors gave for salt concentration, of both the treated and untreated air, seemed on the low side, even taking into account the fact that the *Euroliner* air intakes were some 197m (60 ft) above the water line. Similar readings taken by the staff of the Naval Marine Wing, using similar equipment, indicated that the concentration before the demisters would rise to more than 10 ppm at an absolute wind speed of 65 km/h (35 kn). In particular they had measured a much higher proportion of particles of about three microns, the size which vaned separators by themselves were not able to remove. The severity of sulphidation in the *Euroliner* turbines suggested that the authors' readings might be a little low.

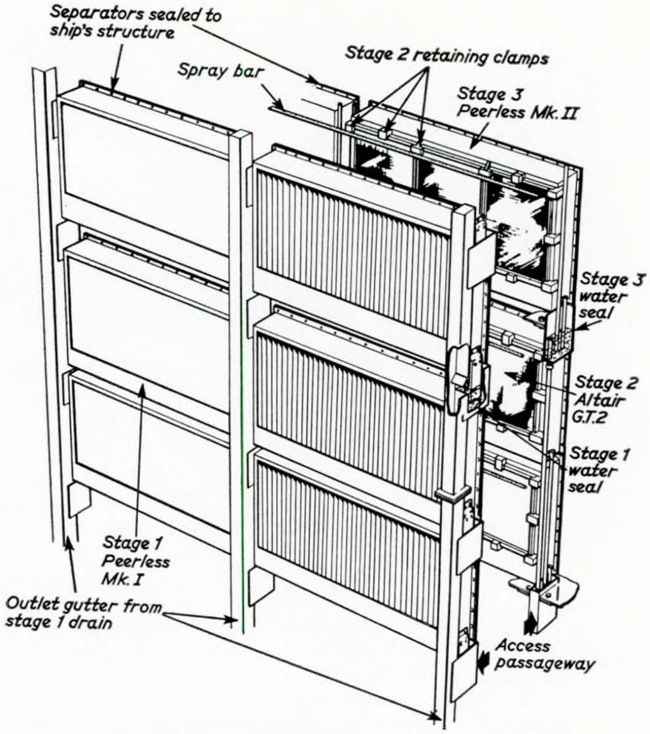

FIG. 23—*Typical arrangement of three stage filtration equipment*

Still peripherally on filtration, he was rather alarmed at the idea of the secondary air filter being able to swing open in the event of its becoming iced up. Did that not invite any accumulations of residual salt that had built up round the frames to fall off and be ingested by the engine? Would not separate bypass valves be preferable?

The fact that ships were now operating on heavy distillate fuel was encouraging. He noted that in both the light and heavy distillates the vanadium content was shown as very low indeed. Was it really possible to measure such small amounts of vanadium? Not very long ago that was thought to be impossible. Could the authors say what was the method used in their analysis?

It was also of interest to read in the paper of the difficulties that the authors had overcome in recovering the synthetic lubricating oil vapour. He would be glad to hear of any other difficulties that the authors had had with the oil and to know of its trade name, if possible. Handling and storage of synthetic lubricating oil (OX38) was a problem to the Navy and they would be glad to know of the solutions that the authors had used.

The authors measured their engine life in hours, not surprisingly. Were those ordinary "calendar hours" or did the company multiply actual hours run by any factor to take account of running at high power? If they did then their logging of engine power from power turbine entry pressure would seem to provide an opportunity for calculating "equivalent hours run" automatically.

MR. D. M. LORRAINE, M.I.Mar.E., said that one of the worrying factors in the type of vessel which his company operated, namely cross-channel ferries, was the ever-increasing demand for power and that had led him to examine the feasibility of the gas turbine as a future motive power unit for that type of passenger vessel.

He wanted to raise two points on the paper. The first had been dealt with partly by the previous speaker, the question of noise levels and air intakes in the comparatively enclosed superstructures as imposed by ferry construction. The second point was that because of the high powers required, engine gearing and shaft vibration had to be considered. A vessel drawing 46 m (14 ft) would require in the light of future planning 32180 to 33520 kW (24 000 to 25 000 hp) to make her commercially attractive for short sea passages, so the extent of the problem would be understood. Perhaps geared Diesels could be used; perhaps gas turbines could be used; he would be grateful for the authors' views on those problems.

MR. J. D. BOLDING, A.M.I.Mar.E., said that the authors had stated that the majority of engine stoppages experienced occurred due to malfunction in the electronic fuel controller. Although the meeting had been told those faults were of a minor nature he was sure that the insignificance of those faults was due to the prudent provision of a complete spare controller.

Current merchant ship gas turbine control systems were, in general, all-electronic and incorporated a high degree of redundancy. The designs concentrated on keeping the engine running when parts of the control loop failed without endangering the turbine. The American vessel, *Admiral W. Callaghan*, and the vessels under consideration in the paper all experienced nuisance shut-downs due to faulty electronic controls; thus it could be agreed that that redundancy approach was justified. However, such features added to the complexity of the equipment and to the servicing problem.

Could the authors give their views on the training of personnel to cope with control systems of this complexity in the light of their experience in training the crews for the Seatrain vessels, bearing in mind the test facilities built into their control system. Also, was any redundancy built into the individual fuel control systems and the sensors incorporated in the protection systems for shutting down the turbine?

He understood, from a paper given by Mr. A. J. Hunt entitled "Considerations for Aircraft Power Plant Controls", that the electronic governors for the gas turbines to be installed in Concorde would be subjected to a "burn-in" period prior to installation to eliminate defective components. Would such a routine be of value for equipment to be used in ships?

It was notable that less problems were experienced in the first vessel of the series, compared to the second vessel. Perhaps the first governors manufactured spent a longer time under test than those for the second and thus had an unintended "burn-in" while drawing office and other design faults were remedied.

It was also interesting to note that two motor generators and a floating battery were used to supply the alarm system. That arrangement was rare since most vessels utilized transformer rectifier units and a battery. Was that arrangement chosen to minimize damage from possible voltage spikes from the 1000 kW thyristor frequency converters associated with the shaft generators?

MR. D. B. CARPENTER, M.I.Mar.E., said he ought to identify himself and say that he was with the engine manufacturers. Having spent fifteen years of his life at sea, he felt he had some recognition of the problems of ships and had been with the particular programme under review since 1966. He was fortunate in being involved with the embryonic, initial conception, which led eventually to the studies mentioned in the paper.

He emphasized that although reference had been made in the paper to the rather extensive studies and comparisons made prior to the commitment for the vessel, the studies took the form of what he referred to as "total economics" and that he felt might be an improper term. But the type of study went into far more than the conventional approach, or gave more attention to annual operating cost than it should.

The paper referred to fuel selection in the sense that a light distillate was used initially to ensure proper operation of the engine. There was another reason for that and that was to ensure that all the related systems were operating properly. That approach proved itself at least in initially pinpointing the cause of the sulphidation. Too often, with gas turbines, the finger was pointed at the fuel when there was a problem and, had they not used the lighter fuel initially, the same thing could have happened here. However, they knew that the fuel could not be causing the sulphidation and it was only natural to look elsewhere.

He wanted to emphasize the reference in the paper to the technical co-operation, particularly in that it had continued since delivery of the vessels and he hoped that it would continue into the forseeable future. That extended all the way down to and including the operating engineers, who had done a superb job in acclimatizing themselves to a piece of equipment that was initially quite foreign to them. The communications that existed and still existed had been responsible for the minimum problems that might have been expected. But, more important, there were also the steps that were taken to correct problems as they arose.

The additive programme was being instituted because it was felt that the sulphidation problem had been, or would be shortly, resolved from the viewpoint of the demisters and the true benefits of an additive could now be properly evaluated. The new additive that was referred to as having been developed in research laboratories involved a new concept that was initially made public in about 1968. However it had taken three or four years to get concurrence throughout the technological world regarding the new theory that was developed on what caused sulphidation.

It would be of interest that it did not make much difference how little or how much sulphur one had, for tests had shown that sulphur in the magnitude of 0·0001 ppm was sufficient to cause sulphidation. The sulphur was simply a part of the process and in his company's opinion it was oxide that precipitated to rapid sulphidation once it started moving.

It was intended to use a material called chromium napthanate as the additive. That had been patented as an additive for sulphidation and recently Rolls-Royce had approached his company for a licence and he suspected that they would be working with Rolls-Royce in future on that.

There were often many things which went wrong between the laboratory and the ship, or the field, but he was very hopeful that perhaps at the end of 1972 they would know whether or not their hopes were justified. In the area of metallurgy mentioned by Mr. O'Hare, he would be getting some new metallurgy some time in the coming winter. They were going to a new base metal and coating in the guide vanes and probably in the first vanes. He could not classify the new material but, thanks to the generosity of the U.S. Navy, they had been using *Admiral W. Callaghan* as a research type vessel, and had been experimenting with various metals and so forth.

The metallurgy and coatings that it was hoped to provide *Euroliner* and her class had been operating for about 4000 hours in the *Callaghan* and they preferred to make sure that it would do what they hoped it would do before it was put into a commercial vessel.

Mr. Carpenter wanted to emphasize that, from his rather humble view, there were leaders at any time of history—they had them in the days of the clipper vessels. He liked to think of Denholm's as being in that category at the present time. He hoped that everybody associated, as well as others in the industry, could contribute, because in the long run they would all gain. He considered himself to be very fortunate to be associated.

There had been reference in the discussion to vanadium measurement and he presumed that the interesting comment about vanadium not being measurable in certain quantities was really in reference to a measurement in the field. He agreed wholeheartedly with that, but disagreed from the viewpoint of the laboratory, because the laboratory had been able to measure vanadium in those quantities for some time with a reasonable redundancy. In addition, with the use of an emission spectograph there was practically complete redundancy in measurements and it could be measured to those accuracies. It was not possible in the field; the method that had been used to date had been one of a co-operation by the oil supplier as well as Mr. Carpenter's organization which picked up samples and dealt with the analysis in the laboratory. He readily agreed that it was possible for a fuel to pass through, or be delivered, and one did not find out about it until it was too late. He added that any distillate fuel which generally left the refinery did not have vanadium in it. That did not seem to be common knowledge, but there was no distillate fuel made in a properly operating refinery that had vanadium. There were some oil suppliers who used residual as a pour depressant. There were other suppliers who because of economics would carry the distillate in tanks, or put it in storage tanks which perhaps were not as clean as they should be. That was where the contamination came in.

COMMANDER T. C. DEACON, O.B.E., R.N., M.I.Mar.E.,, said that Commander Shaw had already expressed the Navy's interest in the type of gas turbine propulsion under consideration. They were looking at a great many possible different designs in vessels. The presentation of the paper, and a lot of the discussion, had referred to the intakes and the question of salt separation. The fact that exhaust systems had received almost no mention perhaps indicated that they had completely trouble free operation. None the less they were giving some cause for thought—perhaps not yet concern. He was particularly interested in two turbines of similar power as those turbines were exhausting into a single stack. In the paper, the authors stated that the two exhausts combined into a single duct, but a sentence later it said that there was a partition plate. Was the partition complete? Were two streams kept completely separate? If not, had there been any problem of recirculation of exhaust under a condition of one engine running and the other not running for some reason? In particular, had there been any occasions of being required to work in the plenum chamber of the non-running engine while the other engine was operating? Had that caused any contamination problems?

Commander Shaw had mentioned briefly exhaust splitters and gas buffetting. Had there been any experience of breakdown of exhaust splitter material? Could one say what was the construction of the central splitter or bullet silencer? What was the experience with the material when it was constructed?

There was a secondary air system designed to cool the external parts of the gas turbine to keep the enclosure cool, supplied by a fan and then entering the exhaust sustem. Was the power for that cooling air supply entirely by fan, or was there any exhaust eduction effect? Did the authors consider it possible that such cooling air might ever be provided solely by use of the exhaust of the engine as an eductor?

MR. K. R. MACINTYRE was interested to hear of the latest developments which the authors described in trying to overcome the sulphidation problem in the engine. It could well be that the actions they had taken would be adequate in overcoming the problem. There were one or two detailed areas, however, which the authors might wish to consider and comment upon which could have a possible bearing on the problem in addition to the one which had already been tackled.

The paper quoted an average velocity of 11·5 m/s (38 ft/s) through the original type of demister. Experience gained by the Ministry of Defence and quoted in an earlier paper had shown that about 8·8 m/s (29 ft/s) was the maximum velocity at which the hook type demister would avoid a breakthrough. He did not know if there were any figures available for the original type which was tested, but it might be that the authors would want to look at that. There was a possible saving grace in that the second and third stages which the authors were fitting might catch whatever came through the first stage should it break through. A point to bear in mind was that the intake would not always see a straight-on velocity, there could be an angular component of wind and although the average velocity was 11·5 m/s (38 ft/s) there could be higher winds locally.

With regard to water washing, which the authors had amplified in their description of the action taken, could they say what steps had been taken in way of ensuring that whatever salt was washed off the compressor was recovered and not deposited further down the engine to cause subsequent damage? There was also the problem of salt in the fuel. Two specifications were quoted in the paper which gave maximum water content of 0·01 per cent/vol, which was 100 ppm. The fuel system shown in Fig. 10 incorporated purifiers and Winslow type filters. He did not know of any purifier manufacturer who would guarantee water extraction at a level below 100 ppm. The Winslow filters would initially absorb water, but ultimately the filters will become fully loaded and tend to pass water through.

If the fuel delivered was near the maximum specification level it might be that there was a case for looking at some improvement to the installations in that area in the light of latest developments. He was referring specifically to the coalescer type filters which had reached a stage of development which could be suitable for the application.

He was interested to see the revised design of exhaust flexible joint and noted there was, in addition to the sliding joint on the main casing, an external flexible asbestos joint. Could the authors state whether some packing was required to support the joint, or whether it was self-supporting? What sort of experience had they had with that?

In the paper there was mention of the electronic fuel controller reponding to overtorque. Could the authors state how that overtorque was sensed, or was it computed.

In cases where engines had to be removed for hot end overhaul, had it been necessary to overhaul the engine completely, or had it been a partial overhaul, paying attention to the hot end of the engine?

Whilst it was appreciated that fuel cost was not the "be all and end all" and that one should look at the operation as a whole, whereabouts in the cost spectrum did the waxey distillate come? Was it close to Diesel, or half way between Diesel and heavy fuel?

MR. P. A. KNOWLES, A.M.I.Mar.E., said that in the conclusions of the paper, the authors had singled out "salt ingestion" as the one difficulty in the way of attaining the intial design expectations. He felt that this was not altogether unexpected. Although the problems had been well aired up to the time these vessels were at the drawing board stage, no one had come up with a satisfactory answer. That was not to say that filter manufacturers did not know about mist removal; on the contrary, practical experience was considerable, but the new demands of flow/space parameters and the very low sodium penetration demanded were way outside that experience. A fresh approach had been necessary and it was significant that since the first vessel put to sea a new generation of demisters was emerging with sodium removal efficiencies approaching the demand. Fig. 19 showed that the existing demister had difficulty in dealing with particle sizes from 1·5 to 12 microns. It was in that region where success in laboratory tests was being achieved with inorganic fibre "in depth" coalescers and in combination with louvres could give a high order of performance.

One of the needs for developments of that nature and, indeed, the subsequent monitoring at sea, was suitable instrumentation. The Casella Cascade impactor being used in *Euroliner* required careful handling and laboratory type facilities for processing the microscope slides.

However, since the total amount of sodium being ingested, regardless of particle size distribution, seemed to be of more use to the operator, an instrument to measure that on a continuous basis would be ideal. Such an instrument had been developed based on BS3928 using the principle of flame photometry and made into a portable form. Would the authors comment on the usefulness of such an instrument on board?

He had heard it argued that it was not the sodium in the air intake which caused the trouble but the sodium in the fuel; but who knew? However, it was interesting to work out the rate of salt ingestion from the two sources and compare them. According to calculations based on figures given in the paper the approximate ingestions were 4 g/h in the air and 1·2 g/h in the fuel if light distillate was used—a ratio of roughly 3 to 1. The heavy distillate could give up to 7 g/h, i.e. nearly double. These figures showed that one source might be as important as the other and, unless evidence could be produced to the contrary' the salt water removal from both air and fuel would be necessary in the foreseeable future.

He was surprised that the authors could not suggest any improvements to the fuel system. To him the system seemed unnecessarily complicated and, according to Fig. 17, accounted for a fair percentage of the overall maintenance time. The necessary fuel cleanliness could be achieved with one filter/coalescer unit rather than the triple purifier/primary filter/secondary filter arrangement. The water levels achieved with the filter coalescer were certainly as good as 5 ppm, if not better.

He was delighted to learn that an enlightened attitude had been taken with regard to fuel system materials. A source of heavy contamination in the fuel, iron oxide, had been virtually eliminated by the use of stainless steel pipework and epoxy coated tanks. He considered that a very wise decision which would pay dividends in reliability and maintenance cost reduction. The authors said that the fuel was monitored at various sampling points. Could they give an example of the analysis of a set of samples with particular reference to sediment figures and sodium removal?

COMMANDER W. J. R. THOMAS, R.N., M.I.Mar.E., was interested to read the statement in the paper about engine stoppages. One had to accept engine stoppages, but he was interested to know the reasons for the twelve hours of unscheduled ship stoppages referred to in the case of *Euroliner*. One of the major advantages of two independent gas turbines was the fact that one should avoid ship stoppages entirely.

He was interested to know what chemicals were used for fire extinguishing and whether automatic fire extinguishing was being used, or fire indication and then operation of the extinguishers by the crew.

Like an earlier speaker, he was puzzled by the exhaust duct arrangements and Fig. 8 did not help him to analyse why the designers had gone from round to rectangular, to square, and then back to round again. Why did that have to be done? The one thing that he had learned about gas turbine exhaust systems was that the less one messed the gas about the better. He was interested to know what materials were used. Stainless steel expansion arrangements had been mentioned. Was the rest mild steel or aluminized mild steel, and if so how was it wearing? Like the authors, he was interested in reducing the costs of systems.

The authors had mentioned that they were using c.p. propellers, and he was interested to know whether they had considered epicyclic and other reversing gears. Why were these rejected in favour of c.p. propellers?

On lubricating oil systems, which turbine drove which lubricating oil pumps? There was an obvious risk if gas generator failure occurred and one lost the power turbine lubricating oil pressure. In this connexion, was there a case for off-engine pumps, electrically driven? In the case of fuel systems, this could also have some application. He had recently spent some time trying to diagnose a fault on a gas turbine system and the inability to produce the fault at below 33 km/h (18 kn) ship speed made diagnosis in harbour rather difficult.

With fuel pumps electrically driven off the engine, one would be able to do what the Navy had done often enough with boiler systems, using a burner simulator, "fudging" the control system to work so that the diagnosis could be made in harbour more readily.

Had the authors encountered any freezing conditions on the North Atlantic runs? How did they detect freezing conditions, bearing in mind that these were combinations both of temperature and humidity?

With regard to the crew, had anyone been found who would cheerfully go back to steam, having served in a gas turbine ship?

A previous speaker had referred to noise. Mr. Thomas said he recently went on holiday and travelled in a cross-channel ship. He could assure anyone who wished to put gas turbines in a ferry that a Tyne at 2980 kW (4000 bhp) was much less noisy, both inside and outside the ship, than the Diesel engines of a typical cross-channel ship and was less smokey too.

On new design, did the authors think they had made the best of gas turbines, or was there any scope for improvement? Did they think turbo-electric drive would give them the freedom to exploit the gas turbine more? What changes would they make in any new design, if they undertook it?

MR. A. R. HINSON, A.M.I.Mar.E., said that they had heard a very interesting paper on the adaptation of electronically controlled aircraft type gas turbines to marine propulsion.

It was on the control aspect that he wished to comment.

Examination of remote control systems for steam turbines and large bore Diesel engines showed that, if the remote control system failed, it was always possible to operate the engine manually by local controls. This was also true of medium speed Diesels, although the local manual controls often contained pneumatic relays.

But on the Pratt and Whitney engines, local manual controls had not been provided. Electronic logic was necessary to achieve satisfactory operation. The various operating conditions to which the fuel controller responded automatically were given in the paper and a moment's thought would show how important was the reliability of the electronics.

There were two engines and, hence, two control systems and, in addition, a complete standby electronic system was always available and could be switched to either engine.

He would be interested to learn if this latter safeguard was a classification requirement, or an owner's requirement. Also, was it possible to use the shaft generators as motors and did the authors have any records concerning the number of times the shut-down functions had operated?

It was interesting to note that another manufacturer who produced gas turbines of similar size and power, also used an electronic control system without provision for local manual control.

Mr. Hinson had believed for some time that electronic controls would, inevitably, become one of the standard methods for controlling certain main propulsion engines. The marine industry had much to learn from the aircraft industry in this respect, and the authors and their company should receive the recognition due to them for their bold and imaginative use of these advanced techniques.

COMMANDER B. J. AUSTIN, R.N., M.I.Mar.E., said that he was one of the few people present who had had the good fortune to make a voyage in *Euroliner*. During his visit he was most impressed by the simplicity of the system and the operation of the engine room department. But when he read his September *Marine Engineers Review*, his attention was drawn to a combined cycle plant* which was described as incorporating a waste heat boiler which serviced an auxiliary propulsion turbine, which in turn was connected with, he was pleased to note, suitable safety devices, into the main gearbox. He thought the advantages of increased efficiency from such an arrangement were out-weighed by the advantage of the present simplicity, although the waste heat boiler might well recommend itself for tank heating and domestic use. He was interested to know what thoughts the authors might have in that direction.

---

* Abstract No. 483 (from *Marine Engineer and Naval Architect*, May 1972). *Marine Engineers Review*, September 1972, p.77.

Correspondence

COMMANDER D. B. M. MATHEWS, R.N., M.I.Mar.E., wrote that the authors had displayed considerable courage in airing the shortcomings that had become apparent in their gas turbine propulsion systems. He was convinced that there was great interest in systems of this sort, which could only be encouraged by such frank discussion of the problems. The remarkable reliability of the transport service by the four ships in question was its own testimonial.

Although the authors had defined the demanding operating requirements for these ships, they had only had time to mention overall operating efficiency (return to the shipowner on his capital) in a general way, when comparing the different types of propulsion machinery available to them.

He did not disagree with the qualitative statements made in the paper leading to the choice of gas turbines in preference to steam or Diesel propulsion. Indeed, it was most gratifying that a comparison between the marinized aero gas turbine and Diesel had not been made on a basis of propulsion engine fuel consumption only. Large Diesel installations carried with them high electrical loads to meet the requirements of lubricating oil pumps and other auxiliaries, and these loads must be taken into account if a true comparison of total oil consumptions was to be made. What figures had the authors deduced for fuel and lubricating oil used for all purposes, on a cost basis, for the propulsion plants considered?

The authors had mentioned the advantages accruing from the reduced specific weight of gas turbine plant compared with other forms of propulsion. One advantage was equated to sixty 12m-containers which could represent some 2400 tonnes, a representative figure for installations of this power where main propulsion Diesel engines alone, without auxiliaries, could weigh 1000 tonnes each. These extra containers, together with the probably greater fuel carrying capacity of the gas turbine engined ship, could presumably be carried at little or no increase in draught. It would be of great interest to have the authors' figures and comments on this subject.

Further to these general remarks on machinery weight, perhaps there were some savings in the first cost of a ship because lighter hull construction might be possible in way of the low specific weight prime movers. It was appreciated that structural demands by the transmission were likely to be similar in all cases.

In the light of the now considerable operating experience of these ships, how did the maintenance costs of the gas turbines compare with those of other prime movers? The authors might wish to include an element in their figures for the somewhat shorter than expected, achieved mean engine life between overhauls—shorter because of salt ingestion difficulties. A representative figure for Diesel maintenance could be quoted as 8-10 per cent of the fuel costs. What was the corresponding figure for aero-derivative gas turbines, and did the authors feel that data of this sort were meaningful? Did the authors have any figures available for industrial type gas turbines suitable for use in the marine environment?

It was particularly encouraging to note that the authors accorded considerable importance to the gas turbine inlet and exhaust arrangements, appreciating that a prime mover should not be considered in isolation of its entire gas system. Clearly a great deal of experience had been gained in this area, particularly with regard to excluding salt from the inlet air reaching the compressors. The updated information given at the presentation of the paper concerning the revised three-stage air/water separating equipment was most interesting and indicative of the advances being made.

Although a gas turbine could safely ingest considerable quantities of fresh water, the salt in sea water, as the authors pointed out, caused extensive and costly damage. An undersirable feature of efficient sea water/air separating equipment could be the accompanying high pressure drop which, in turn, had a marked adverse effect on fuel consumption and performance. Figures of a 1·2 per cent increase in specific fuel consumption per one per cent loss in inlet air pressure (related to atmosphere) were quoted by some authorities, with similar figures applicable to the exhaust ducting. Would the authors comment on these figures and give the basis on which their calculations were founded? It might be of interest that recent developments in this field had resulted in excellent salt exclusion performance in marine atmospheres, with a much reduced pressure loss, representing an improvement of at least 40 per cent over the figures quoted at the presentation of the paper for a three-stage air/water separating unit. The authors' views on the through life, fuel costing of a ship, where small but consistent improvements of this nature could be effected, would be most welcome.

With regard to the exhaust arrangements, it was appreciated that the layout of each system was heavily constrained by the overall ship design and might not be regarded as ideal. The material used for the uptake was not specified, apart from a number of stainless steel expansion pieces. As these ships operated for long periods at high power with an exhaust gas temperature of the order of 500°C (932°F), it would be most interesting to know if the degradation of properties of mild steel at these temperatures—if this be the uptake material—had resulted in any noticeable adverse effects on the ducting, or whether completely satisfactory performance has so far been achieved and was confidently expected in the future. Would the authors say what material was used for the exhaust ducts, and give their views on the current global naval practice, with propulsion plants of this type, of using low carbon stainless steel and other more exotic materials? The authors' comments, on the materials used in the construction of the silencer bullets and how they had withstood the operating conditions so far, would equally be welcome.

The integrity of the silencer bullets might be further threatened by significant exhaust gas velocity profiles, generated perhaps in the power turbine exhaust volute or by the complicated ducting geometry.

What information had the authors on this subject, relevant to this particular installation, what peak gas velocities did the silencer bullets experience and what was the ratio of peak to mean gas velocity in way of the bullets and in the exhaust ducting, close to the exhaust volute, or in any other particularly affected zone? What were the authors' views on the life expectancy of the exhaust systems as a whole, including the silencer bullets, and what were their comments on the accessibility of the bullets, particularly the lower one, for repair or replacement?

It was noted that Figs. 6 and 8 indicated a cowl fitted to the top of the exhaust duct. Was the design of this cowl based on the results of ship model tests and were any adverse effects on ship fittings anticipated as a result of possible impingement of the high temperature gas plumes? With reference to the upper part of the exhaust ducts, would the authors' comment on any ill effects of relative expansion that might have been experienced within the single duct length when only one engine was in use?

Silencing of all machinery was becoming of increasing importance as a result of the modern accent on environmental control measures. Would the authors say what the designed attenuation of the silencer bullets was, what was their performance in practice and, if these data were available, what were the positions of the noise measuring instruments relative to the exhaust exit plane when the performance figures were recorded. No doubt the desirability of fitting acoustic absorber to the duct walls, either with or without a silencer bullet, was considered during the design stages. Would the authors comment on the conclusions reached at this time as to the advantages and disadvantages of the resultant compromises?

The authors' comments on the need for high standards of hygiene in the fuel system were most interesting and clearly much attention had been paid to achieving these in practice. In some recent ship construction experience it had been found difficult to prepare the metal surfaces of wing and deep tanks to a suitable standard for the successful application of epoxy coatings, due to problems of accessibility to the more remote corners and crevices of these tanks. Would the authors remark on any such problems encountered in their ships and how successfully the epoxy coating had lasted in service? Perhaps occasional renovating work had been necessary to these coatings, which would be a time consuming job. The coating of the day tanks was not specifically mentioned. Since the fuel at that stage was in a highly purified state, presumably these tank surfaces were treated to prevent corrosion and subsequent fuel contamination. Would the authors state whether the day tanks were expoxy coated, or whether a long life metallic lining would not be a desirable and cost effective feature?

It was notable that this installation design had avoided any possible pitfalls that might be associated with the recovery of waste heat from the gas turbine exhaust. No doubt aspects of increased capital costs, higher pressure drops, complexity and greater maintenance loading were taken into account. Would the authors outline their reasons for rejecting the more complicated cycles which were no doubt considered in the early stages of design?

Finally, would the authors say whether they would choose the same, or similar, propulsion plant for the next generation of their ships and give the reasons for their decision?

Authors' Reply

In reply to the discussion, the authors referred to Commander Shaw's comment on the rather complex arrangement of exhaust trunking. They agreed that it was not exactly a text-book proposition, but was a compromise between the ideal and reality. Quite simply, constraints had been imposed due to engine room layout and by the short fore and aft dimensions of the superstructure. The manner in which its design had been "disposed" to accept these constraints, coupled with the relatively low exhaust duct velocities had, however, proved highly successful.

No buffetting or vibration had been experienced in the exhaust or in the supporting of the bullet silencers.

Commander Shaw had been rather alarmed at the thought of a possible swing-open door function in way of second stage air filters. The authors could only say it was a very early idea which had been looked at—and rapidly dropped. Likewise the idea of some separate bypass arrangement had been examined but again, due, amongst other factors, to the space limitations, had not been adopted. The situation requiring consideration of these alternatives had now been adequately met by sensing the pressure drop across the demister modules and coupling the sensors to the alarm systems.

The authors were interested that the Navy's thoughts on three-stage demister arrangements closely paralleled their own and they agreed that the three-stage arrangement looked most likely to bring favourable results in reduction of salt ingestion.

With regard to salt concentration for untreated and treated air, Fig. 19 illustrated the results of only one of a large number of tests carried out. Readings obtained varied considerably depending on relative wind direction and velocity. For example, with a relative wind direction of 240° and an absolute speed of 48 kn., the concentration before the demisters of salt of particle size in the range of 4 to 12 microns, was almost double that shown in Fig. 19, while the concentration in the range of 12 to 100 microns was reduced to about one-tenth. Regardless of wind direction and velocity, however, in the 0·4 to 4·0 micron particle range, the concentrations measured remained almost constant.

Commander Shaw had wondered how vanadium amounts in the fuel as low as 0·1 ppm. could be measured. This could only be done in a laboratory with a fluid analysis spectrometer, details of which could be sent to Commander Shaw.

Other than the initial problems experienced with electrostatic precipitators, no other difficulties had arisen in respect of oil recovery. The lubricating oil used was a straightforward series 2 synthetic and no problems had been found either in handling or stowage. In use, consumption was very low, but heavy oil wastage accrued due to renewals of the charge after about 350 hours, due to acidity. Although this might sound depressing, it had to be remembered that although each engine was of 22 370 kW (30 000 hp), gas generator and free turbine oil changes were of the order of about 82 litres (18 gal) and renewing the charge was not such a mammoth operation. Nevertheless, it was undesirable and improvements like special filtration of the return oil from the precipitators were currently in hand. Engine hours quoted were ordinary calendar hours and not factor corrected, as to date the engines had been running entirely within their normal ratings.

Mr. Lorraine had spoken of noise levels, which was traditionally, a problem anticipated with gas turbine plants. In the authors' experience it had not been a major problem either at the intakes or within the superstructures. In fact, noise levels were much below that which would obtain with other types of power units. The authors saw no problems with regard to gearing or shaft vibrations in relation to Mr. Lorraine's suggested application. Certainly, as far as the vessels discussed in the paper were concerned, there was a distinct absence of vibration in gearing and shafting.

Mr. Bolding had referred to quoted stoppages which had occurred due to failures in the electronic fuel controllers and raised the question of built-in redundancy features. No such features were provided on the vessels under discussion. It was true that redundancy approach would avoid nuisance shutdowns, but as Mr. Bolding had rightly pointed out, the electronic fuel controllers were complex enough as it was, without adding further circuitry. Regarding his reference to comparison between *Euroliner* and *Eurofreighter* controller faults, *Eurofreighter* had had more trouble, but this had been primarily due to faults in the supply system rather than in the controllers themselves. Some further problems had arisen due to newly incorporated design changes, but, as had been indicated, they had been easily traced and remedied.

Mr. Bolding had wondered if a burn-in period such as was given to the electronic governors to be installed on the Concorde would be of value for shipboard application. In the authors' experience of this type of equipment, component failure usually occurred very early in life and, undoubtedly, a burn-in period would be of value. The controllers fitted to the *Euroliner* class vessels had undergone the same test periods as was normal in aircraft practice, during which time incipient failures had been isolated.

In reply to Mr. Bolding's query on the training of personnel to cope with the complexity of equipment presented to them, the authors felt that this had been one of the most vital areas in the operation. It would be appreciated that a great deal of thought had been applied as to how the staff could best be trained to operate the machinery and all the control devices which would be installed in these ships. The problem of training people to run and look after gas turbines was not particularly difficult. It was a new technique, however, which did require specialist training; but the electronics were another matter.

The SPC2D electronic fuel controllers, like the fuel pump and the valves of Diesel engines, were the heart of the main engine operation. All the rest of the controls were quite useless if the controllers had faults that could not be identified, located and corrected.

Most of the officers had had up to three months college training on electronics, followed by further courses given by the manufacturers and suppliers. This had not proved to be quite enough. Faults had arisen which had taken a long time to trace and there was a need for more training in troubleshooting techniques. To this end, a programme of on-board training was now in progress, carried out by a specialist instructor. A further programme was to be carried out in the authors' offices from time to time for the benefit of officers who were between postings. Actual hardware would be used during instruction, so that faults could be built-in and correct fault finding procedures followed through. On-board training carried out so far had proved most beneficial.

Mr. Bolding's last question related to the two motor generators and the floating battery to supply the alarm system and asked why not just transformer rectifier units and a battery.

The answer was that the motor generators supplied not only the alarm circuits, but also the fuel controllers which required an a.c. supply. The system comprised of two transformer rectifiers which drove the d.c. motors of the motor generator sets, which in turn drove the a.c. generators. One transformer rectifier drove one d.c. motor which in turn drove two a.c. generators to supply the controls of both engines. Since there were two complete sets there was a 100 per cent redundancy built in. Further, in the event of failure of the supply to the transformer rectifier units, the floating batteries supplied directly to the d.c. motors, thus maintaining the system under all foreseeable conditions.

The authors thanked Mr. Carpenter for his contribution to the discussion and could only add further emphasis to his remarks on the technical co-operation which existed from the embryo stage right to the present time, between all parties concerned. The authors agreed that the efforts made in this direction had made, and continued to make, a most valuable contribution to the success of the operation.

There seemed to be some confusion in Commander Deacon's mind about the exhaust arrangement. Although, as stated in the paper, both exhausts finally combined into a single duct, they were kept entirely separate. The division went right to the top and there was no interaction between them. There had also been a number of occasions when work had been carried out in the plenum chamber of a non-running engine while the other was running and no problem whatever had been encountered.

With regard to Commander Deacon's question on the secondary air system, the authors would apologize for not making it clear in the written paper, that the cooling air fan was only used in starting up or during high ambient air temperature conditions. During normal running operation, the cooling air was drawn through the enclosure entirely by the strong exhaust eduction effect.

The bullet silencers were cylindrical in form, fabricated from perforated mild steel and packed with rock wool. No trouble had been experienced to date with the silencers.

Mr. MacIntyre had raised the point of air velocity through the demisters and suggested that average velocities of 11·5 m/s (38 ft/s) quoted by the authors was above the limit of practicality of the hook type demister. The authors agreed, which was why discussion on the type to fit initially had swung to the chevron.

Developments, however, in the field of demister design had, since those early days, allowed of an increase in the upper velocity limit, as witness designs now being put forward by various manufacturers, and had allowed for the adoption of a hook design for the now fitted first stage.

With regard to water washing, there was no problem with respect to salt deposition further down the engine, as plugs were fitted in the casing to allow the contaminated water to be drained off. Initially water washing was carried out by directing the water through the compressor intake only while the engine was cycled up and down by the starter. This was now being followed up by direct pressure water washing through the fuel manifolds and nozzles, as there was a definite advantage in getting a positive flow into the turbine section of the engine.

With regard to Mr. MacIntyre's comment on fuel and, specifically, water content, the authors agreed that a fuel at the upper specification limit, supplied directly to a coalescer type filter, could be expected eventually to lead to overloading. However, from experience to date with the existing system which embodied a routine, but rigid, system of inspection of all bunker barges before they were loaded, the analysis of representative samples throughout the supply and the operation of purifiers at fairly modest outputs, had not revealed difficulties of the type envisaged. The filters were, of course, fitted with drain connexions and had operated entirely satisfactorily.

To answer Mr. MacIntyre's question on overtorque, this was a computed value and was arrived at by monitoring the speed ratio of the power governed high pressure turbine and the free turbine.

With regard to engine overhauls, the authors would confirm that on many occasions work had been limited to the turbine or "hot end". In general, the operating results obtained prior to removal, coupled with the visual boroscope examination of the engine on receipt at the overhaul works, determined the extent of the overhaul—with of course consideration given to the possible adoption of any design changes or modifications deemed advisable to incorporate at that time.

No difficulty had been experienced with the exhaust "joints" which were of the reinforced asbestos external bellows type and entirely self-supporting. The form of the exhaust main parts precluded the direct impingement of hot gas on to the bellows material—and the pressure loading at that point in the system was not severe.

The authors agreed with Mr. Knowles' assumption that contamination of fuel by iron oxide had been virtually eliminated by the use of stainless steel pipework and epoxy coated tanks.

The suggested simplification of the fuel handling system however, was not, it was felt, a step which could happily be taken at this stage. Bearing in mind the high daily throughput, and the consequences of any shortcomings in this part of the system, it was considered advisable, at least at this stage of development, to continue with the system as fitted.

Whilst not disagreeing with the very logical argument that the results of sodium penetration were quite unrelated to the source of the contaminant, the authors would point out, perhaps quite unnecessarily, that what was being attempted was in fact the reduction of the total contamination and the achievement of this at an economical level. The results to date of improvements in the demister operation, particularly as reflected by the reduction of "peaking" contamination, had been most encouraging and suggested that the present line of action was that best suited to the existing circumstances.

The comments on the limitations of the Casella Cascade impactor as a general purpose instrument were accepted, but for the purpose intended and in fact required during the development stages of the demister system, it was doubtful if the measurement of total ingestion only would be of sufficient value.

Commander Thomas had queried the total of 12 hours of stoppages attributed to *Euroliner* and how that came about on a vessel designed to avoid such an occurrence.

The authors regretted they did not clarify this matter in the paper. In fact, the 12 hours was in one block and was not a stoppage, but a delay. *Euroliner* was held at anchor awaiting delivery of a new spare SPC2D fuel controller. As the policy was to allow for possible redundancy of a complete controller and the delay time could easily be made up, the decision was made to hold the ship. Perhaps on reflection this was being overcautious, but in an operation of this sort, every precaution had to be taken, at least until more experience had been accumulated.

It was assumed that Commander Thomas's question on fire extinguishing related to the engine enclosure. The system was fully automatic and used a water spray, or mist, only. No chemicals were used.

On the question of lubricating oil pumps it should have been made clear that the gas generator and free turbine each had their own separate lubricating oil system and individual engine driven pumps. Failure of one system did not, therefore, affect the other. There could be a case for off-engine pumps electrically driven, but it was difficult to see any particular advantage to the system as fitted. With regard to the use of c.p. propellers as opposed to other means, it had to be borne in mind that they allowed considerable flexibility in manoeuvring and enabled also the facility of declutching the free turbine drive entirely from the gear train, which was of great advantage in relation to the use of the shaft generators.

On the final point of possible scope for improvement, including perhaps the adoption of a turbo-electric drive, the present design obviously could not be regarded as a final, or end point, of progress. Within even the narrow limits of a "repeat" vessel there were many areas where, from the experience gained, there was room for improvement and, in the wider field, there were obvious possibilities. These included the utilization of the large amount of waste heat in the exhaust gases, and the possible utilization of the engine form on LNG vessels, a purpose for which it would appear extremely well suited.

No freezing conditions had been experienced to date, but if such a condition occurred it would be detected and alarmed by means of the demister pressure drop sensing devices referred to in the Appendix.

Commander Austin specifically mentioned the possible adoption of a waste heat recovery plant to be utilized, either for the development of additional propulsive power, or for cargo heating as in a tanker. Although the "domestic" load on the *Euroliner* class, including both heating (bunkers) and generation, was relatively small, this possibility had in fact been considered by the designers. It was discarded on the grounds that the advantages to be gained did not warrant the additional complexities involved. This decision might not be agreed by all, but in the authors' opinion was a correct one at the time, and a prudent choice, bearing in mind the number of new concepts already embodied in the design.

The authors appreciated Mr. Hinson's remarks pertaining to control systems in turbines and Diesel engine installations and indeed had had considerable experience themselves with the systems mentioned.

The gas turbine electronic controls did differ in that there was no override if any one of the supervisory logic circuits actuated a shut-down, nor in the authors' opinion, was it desirable to have such an override because of the possible consequences which could follow its use. Reliability stemmed from two sources. twin screws plus a complete spare fuel controller.

A spare controller was not a classification requirement. It was the owner's decision entirely to fit a complete spare controller which could be switched to either engine as and if required. It was felt that this was the heart of the system, and one area where they could get into trouble and the unit they had most to learn about. In the authors' opinion, to carry a spare controller was the only real way to safeguard against problems in that area. The shaft generators were in no way suitable as "get-you-home" motors. With a twin-screw arrangement was adequate cover.

With regard to operational shut-down conditions listed in the paper, those which had occurred had been few and, so far, with two exceptions, for real reasons. For example, automatic shut-down had occurred on one occasion due to loss of lubricating oil to the gas generator because of a fractured pipe, and on another due to an engine room rating inadvertently pushing an emergency stop button located adjacent to the Power-Pac (a guard had to be fitted to prevent re-occurrence). The two exceptions had been the result of component failures in the fuel controllers.

In reply to Commander Matthews, the authors said that his point, regarding the heavy electrical load associated with the sundry auxilliaries which would be required for a comparable Diesel engine plant, was a valid one, but in this instance no account was taken, for comparison purposes, of the equivalent consumption. This was a deliberate omission on the part of of those concerned, it being felt that in the case of a large Diesel plant this load would almost certainly be carried by a waste heat recovery plant. Another aspect however of this question was that of the differential between the auxilliary plant maintenance loadings, and here clearly the gas turbine plant had advantages.

The points made regarding the savings in weight, mainly in machinery, were agreed and to these comments the authors would only like to add that the space saving so represented was made at a portion of the ship body best suited to the carriage of freight.

With regard to Commander Matthews' comments on maintenance costs on this, as opposed to Diesel engine plants, the authors did not consider themselves yet able to state a realistic or final figure. Experience to date was based on the results recorded for little more than fifteen months operation on any one vessel and as would be clear from what had been said, this period, on all vessels, had seen a number of abnormal failures and the introduction of numerous alterations. If, as suggested, a "correction" for such factors were then applied to the actual costs, the resulting figures would, at best, be open to question. Indications were seen to suggest that a figure of about 15 per cent might be near the mark, but in considering this, various factors had to be borne in mind. Specifically, this figure in a g.t. plant would include a continuous up-dating of the engine and since on board maintenance was of a minor order, would embrace costs which in plants of other kinds did not normally feature in the M and R account. Another point of considerable but indeterminate value was that of the high degree of ship availability afforded by the concept of workshop repair/repair by replacement (from ship viewpoint).

The arrangement of air intakes and, in particular, the steps taken to eliminate salt ingestion were indeed matters of the utmost importance in the marine application of this engine type. This had been clearly demonstrated by the results to date —as had the measure of what remained to be learned by the changes already adopted. It would be appreciated that the original design was laid down at a time when relatively little marine experience existed, but the relationship, as quoted by Commander Matthews, between fuel consumption and intake pressure losses was rather higher than suggested by the experience of the authors to date.

Savings, however, of the order suggested, i.e. a 40 per cent reduction in P D were indeed of interest—and in passing served again to underline the scope for advancement in this aspect of the marine application. As to exhaust systems, the keynote was unquestionably the degree of constraint effected by overall ship design. In the case of *Euroliner*, the relative freedom enjoyed, at least as to duct sizing, had resulted in relatively modest velocities, and no major problems with erosion or noise. The ducts were of plain steel throughout, with a heat resistant coating, and results to date had certainly not indicated any compelling argument, in the case of this installation, for the use, either of more sophisticated materials, or of acoustic duct linings. The outlet cowl configuration to which Commander Matthews referred was arrived at following wind tunnel tests primarily to avoid re-ingestion, which object was very satisfactorily achieved, and happily there was no experience on which to base an opinion as to the effects of gas plume impingement on ships fittings.

With regard to tank coatings, it was confirmed that the day tanks were coated in a similar manner to the other oil tanks, and that to date no difficulties had been experienced with these coatings. This statement did, however, exclude the initial problems encountered—despite the closest practicable supervision exercised during outfitting—due to initial dirt and which, unless pre-service tank flushing (as for lubricating oil systems) could be achieved, were difficult to eliminate under the normal shipbuilding constraints.

To some degree the accessibility, problem as mentioned by Commander Matthews in respect of coating applications within tanks, could be limited by consideration of this during the design stage. Beyond this, the major factor was unquestionably that of close and knowledgeable supervision of both the preparation and the coating processes with—in the normally inclement weather conditions of most shipbuilding areas—attention paid to the liaison between these operations.

Related Abstracts

Selection of propulsion machinery for a fast ferry.

This article gives the results of a study into an economic comparison between a heavy duty, residual fuel burning gas turbine, and distillate fuel burning aircraft type gas turbines. The application selected as the basis of comparison was a twin-screw dual gas turbine propulsion plant in a high speed ferry designed for roll-on/roll-off service. The objective was to compare the economics of heavy duty gas turbines manufactured by the General Electric Company (GE) with aircraft type gas turbines as manufactured by Pratt and Whitney Aircraft and Rolls-Royce. In costing the alternatives, the changes in capital and operating factors were considered, on an equivalent basis, over an assumed 20 year life, excluding operating costs assumed to be common to all the power plants considered. The residual fuel burning gas turbine was the only one of the four evaluated which required a fuel treatment system, consisting of water washing and additives for fuel conditioning; an allowance was made for this, and for the substantially higher installation costs of this unit. A preliminary machinery arrangement for the ship, based upon the use of aircraft type engines, was used for reference purposes, and an arrangement was developed for the heavy duty turbine, which allowed for headroom and volumetric problems. It was concluded that:

a) The GE residual fuel burning gas turbine presents a more economical means for propelling the study vessel, when compared with aircraft gas turbines evaluated by this report. Particularly significant savings are obtainable with moderate to high at-sea utilization.

b) The economic results, as presented, are very significantly dependent upon estimates of fuel cost and machinery acquisition costs. The fuel costs have been conservatively estimated and it is believed that the differentials presented are realistic. However, these figures should be checked to ensure that the assumed discounts are in line with owners' experience.

c) Due to the large operating cost savings caused mainly by differences in fuel costs, extremely large variations in the acquisition costs estimates would be necessary to affect the conclusion indicated in (a) above.

Shipping World and Shipbuilder, July 1971 Vol. 164, pp. 822, 823.

Propulsion of LNG tankers by heavy duty gas turbines.

In this article the author deals with the combustion and automatic change-over fuel systems for a dual fuel gas turbine such as would be fitted to a LNG tanker. A brief outline of the cycle features of marine propulsion gas turbine units, and the functions of the fuel system, is followed by notes on the five types of fuel nozzles or injectors available, giving *pros and cons*. The types are: pressure atomizing nozzles, air blast nozzles, air assist nozzles, vaporizing fuel nozzles and centrifugal atomizers, of which the first three only are suitable for use in dual fuel machines, when the gas and liquid fuel nozzles are normally combined into one body, with the gas passages and cap surrounding the liquid fuel nozzle. Consideration is given to two oil fuel systems, a "freewheeling" flow divider system used for distillate fuels only, and a more complex, but universal system suited for all types of liquid fuels. The components are detailed, and three modes of control enumerated—set proportion of fuels, set value of one with load governing on the other, governing with one fuel up to a maximum value and thereafter governing on the other. Notes on fuel systems include reference to the booster compressor required to deliver boil-off gas to the gas turbine, and the alternatives of a cryogenic compressor without intercooling, to raise both pressure and temperature, or a heat exchanger placed before the compressor.

White, A. O.: Shipping World and Shipbuilder, July 1971, Vol. 164, pp. 825–827.