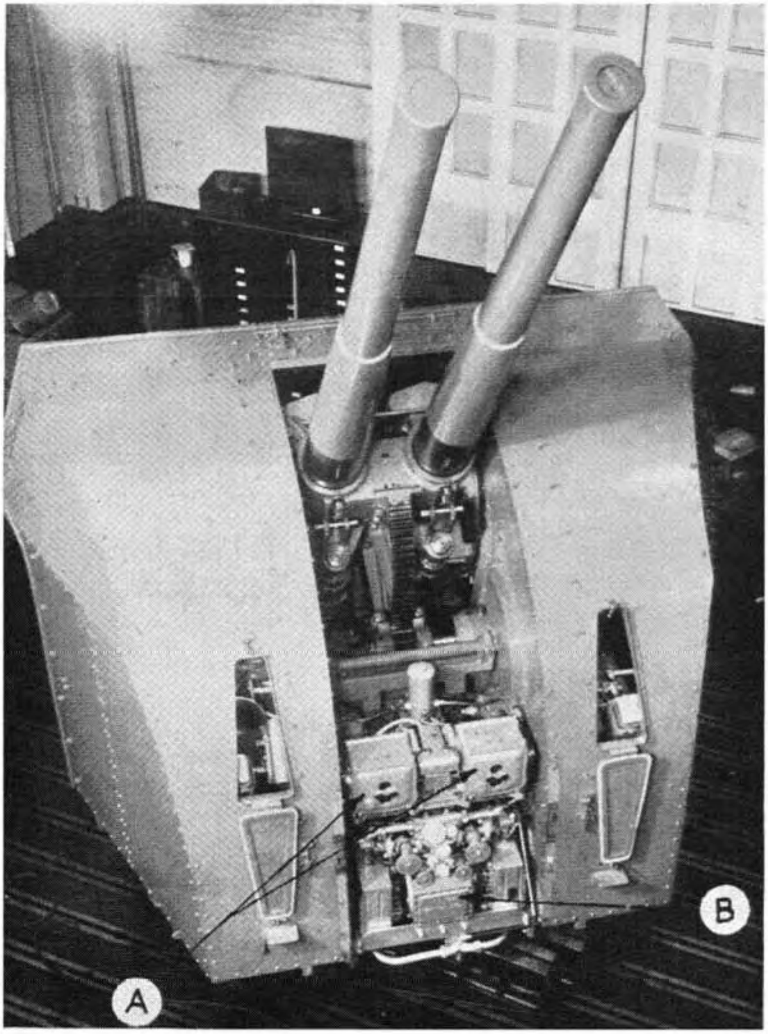

FIG. 1.—A.R.L. HYDRAULIC R.P.C. 1937. FRONT VIEW WITH SHIELD PLATE REMOVED SHOWING PUMPING UNIT

A.—" B " TYPE UNITS FOR REMOVING STEADY STATE VELOCITY ERRORS

B.—PUMP

THE EVOLUTION OF THE MODERN GUN MOUNTING

PART III

THE REMOTE POWER CONTROL OF GUNS*

by

COMMANDER (E) J. O. H. GAIRDNER, O.B.E., R.N.

Naval Ordnance Department

The Problem

Part II in this series of articles described the great changes that were introduced into gunmounting designs when the anti-aircraft problem was added to that of engaging ships at extreme visibility ranges. The difficulties of ammunition supply, loading the ammunition at high elevations and of fuzing were great, but the greatest hurdle to be surmounted was that of accurate gun pointing.

The basic principle of H.A. fire control is that a pre-determined rate of fire is first selected and the computer must then calculate, among other things, the fuze length that is to be set at these selected time intervals. This it will do, and that fuze will in due course, be set and the gun fired without the computer being aware of the accuracy of gun elevation or training at that instant. From this it follows that the gun must be continually laid on the target so that when the fuze is " ripe " to be fired, the gun is " on."

The above holds good for both land and ship weapons, but the problem for the naval gun mounting designer is seriously complicated by the roll of the ship. Consider a gun at 45° elevation, trained fore and aft. As soon as the ship starts to roll the training base is tilted and the gun moves away from the target. It can readily be seen that to restore the gun on to the target requires a movement both in training and in elevation, the magnitude of each being related to the angle of roll, the angle of elevation and the bearing of the target (in this case zero). An exploration into the realms of trigonometry will show that as elevation or roll increases these corrections become very considerable. In the extreme case of a gun at 90° elevation, the training correction becomes infinite, i.e. the training engine of the two-axis gun under those circumstances is physically incapable of restoring the gun on to the target. At that angle, when the trunnions are canted, no amount of training will alter the direction in space towards which the gun is pointed.

The speed and acceleration necessary to stabilize the gun are therefore compounded of the above corrections, and the rate at which the ship is rolling. As speeds and accelerations rise the power required to stabilize the mounting skyrockets, until conditions are reached at which the stabilizing of the gun ceases to be a problem of economic or even practical engineering. The following figures serve to illustrate the above points. They refer to a 4 in. twin mounting on a bearing of 0° in a ship with a 10 second rolling period :

---

*Parts I and II by Cdr. (E) G. O. Naish, R.N., were published in *Papers on Engineering Subjects* Nos. 19 and 20.

	Elevation	*Maximum Correction*	*Maximum Velocity*	*Maximum Acceleration*	*Peak H.P.*
(i) 10° *roll*					
	30	5° 43′	3½°/sec.	2½	1·07
	50	11° 42′	7½	5	4·27
	70	28° 30′	17	15	26·7
(ii) 20° *roll*					
	30	11° 29′	7½°/sec.	6	5·34
	50	22° 11′	15	14	24·1
	70	43° 13′	40*	75*	418*

(*By extrapolation)

Just as velocities and accelerations under the easier low angle conditions forced the designers of relatively small mountings to adopt power elevating and training, so, later on, the much more severe conditions imposed by H.A. fire with its demand for continuous and really accurate gun pointing, compelled them to eliminate the human link by fitting fully automatic remote power control (for more reasons see Part II of this series).

3-Axis Mountings

The magnitude of the powers that have to be put into two-axis mountings to compete with these conditions is sounding the death knell of this type of mounting for H.A. purposes, and progress must be sought either in 3-axis mountings or in means for reducing the roll in ships.

In the 3-axis mounting provision is made for keeping the trunnions horizontal independent of the attitude of the rest of the mounting, thereby removing in a single step the need for the gigantic training corrections referred to above. Although it is ideal in principle, the 3-axis mounting is sometimes difficult to translate into hardware, and no such mounting has as yet appeared in the navies of the world, except in the medium and smaller sizes. But as only comparatively small weapons have so far been used for H.A. purposes, the need for large three-axis mountings has mercifully not yet been voiced.

Ship Stabilisation

The recent advances in ship stabilisation are outside the scope of this article although the subject is very much the concern of the gun mounting designer. The figures quoted show, with force, the great saving in power if the roll be reduced from 20° to 10°. Powers required to keep a gun pointing in space are dependent upon the velocity and acceleration of the platform beneath it and may be shown to vary inversely as the cube of the rolling period. If the ship stabilizer can lengthen the period from 10 seconds to 15 seconds, the power required is reduced in the ratio of 3·4 : 1.

Servo Mechanisms

For present purposes a servo mechanism may be defined as a system which is operated by a difference between two quantities and runs in a direction to null that difference. A straightforward power amplification system does not therefore necessarily constitute a servo though the expression is sometimes so used incorrectly.

A simple example of a servo is the familiar hydraulic steering gear which, in common with other servos of such a nature, may be expressed graphically thus :—(the symbols for a steering gear have been used as an analogy)

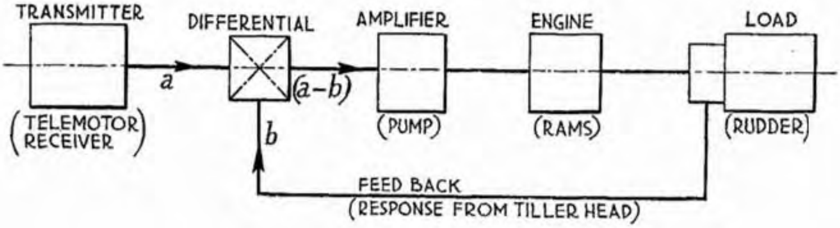

FIG. 2.—THE SERVO MECHANISM OF STEERING GEAR

This diagram shows that if the transmission is stationary the engine will run until it aligns itself with the transmission. If, however, the transmitter runs at a constant speed the follower will run at the same speed but with an angular lag or error. This is because the system as drawn depends upon the existence of such an error i.e. (a—b) in diagram, to operate at those steady speeds against friction (or in the steering gear analogy to put the pump on stroke). Practical experience with steering gears tells us this is so, for from observation the steering engine always runs on through an angle proportional to this error after the wheel is brought to rest.

In high performance servo mechanisms these " running " or " steady state" lags can be eliminated, for they are always a definite function of the factor that causes them, such as speed, acceleration, etc. Having once measured the speed or acceleration therefore, a compensating signal can usually be applied and it is in this that part of the art of the servo designer lies.

The " steady state " errors can be reduced to very small quantities in gun mounting applications without direct compensation by increasing what is known as the " stiffness " of the system, i.e. the torque produced for a given misalignment. Reverting to the steering gear analogy :—if, for a given positional error the displacement of the lever differential were doubled, the " running " lag would be halved and the system would be twice as responsive or lively.

The above points have been made to illustrate that though " steady state " lags may be reduced to nil, transient errors cannot be avoided since without an error a change in state cannot be made. An error must therefore inevitably arise proportional to the next higher derivative of the " steady state " for which compensation is provided, e.g. if velocity compensation is provided an error due to acceleration will occur. If " steady state " acceleration errors be eliminated, an error due to rate of change of acceleration will remain. Errors due to this or higher derivatives are not of great consequence and are normally disregarded in the interests of servo simplicity.

Effect of increased stiffness

In gun mountings, increasing the stiffness adds to the difficulties of control for, with a high inertia load and with very little friction, overshoots become increasingly difficult to damp out. If the natural frequency of the control system matches that of the gun mounting itself and certain conditions of phase relationship over the cyclic loop are established, or if the damping of the system is inadequate, a state of self-maintained oscillation may be set up which appears to constitute a state of perpetual motion so long as the control circuits are energised. A homely example of this may be quoted.

Suppose a motor cyclist, travelling at speed, strikes a pot hole and the front wheel is deflected from its course. Castor action, assisted perhaps by the rider,

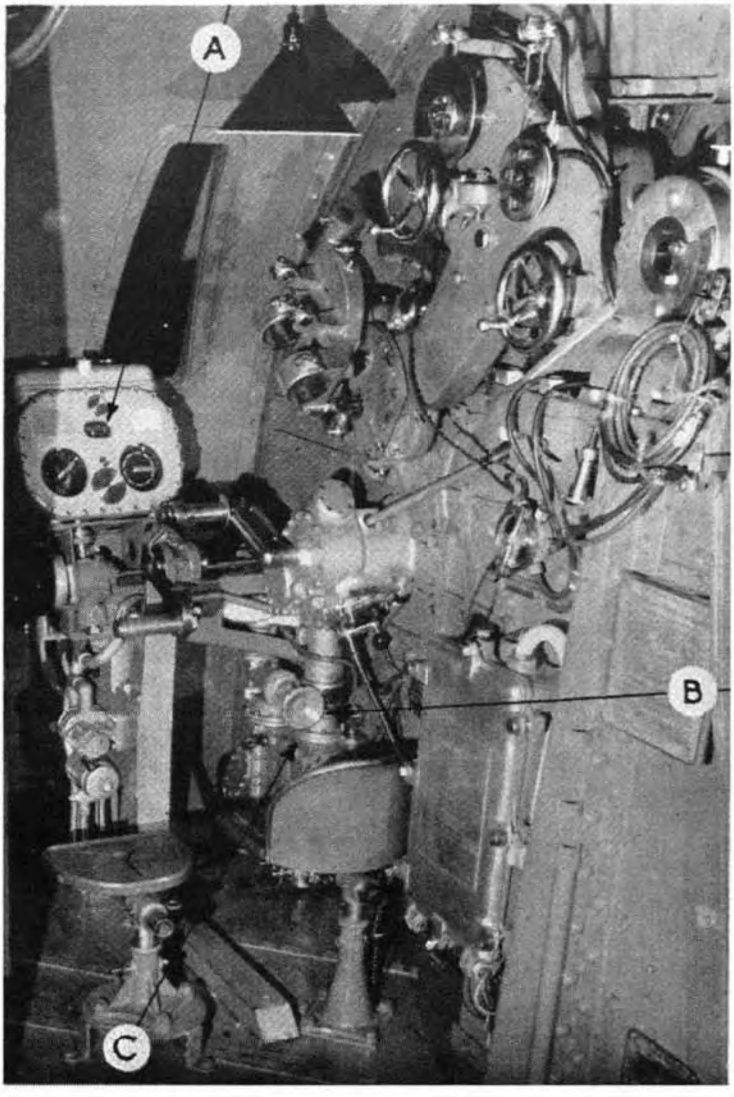

FIG. 3.—4 IN. MOUNTING WITH A.R.L. HYDRAULIC CONTROL. LAYER'S SIDE

A.—COINCIDENCE INDICATOR

B.—TRIMMING ADJUSTMENT FOR REMOVING ERRORS IF FRICTION CLUTCHES RENDER

C.—ELEVATING ENGINE

will start to centre the wheel which, due to its momentum, will overshoot to the other side. If the rider's physical reactions are sufficiently rapid he will be able to apply an opposing torque on the handlebars that will quickly bring the cycle on a steady course. If his reflexes are slow, the torques may be out of phase with the handlebar movement and may actually tend to increase the overshoot each time. If his response is critically incorrect in phase and magnitude and his natural frequency approaches or equals that of the wheel in the pillar bearings, the speed wobble will increase in intensity, a state of affairs that can be ended either by stopping the motor-cycle or, if he has sufficient nerve, by removing his hands from the bars and allowing natural damping to eliminate the wobble. Under other conditions, when the rider's unstabilising responses are balanced by the damping action of friction, the wobble will continue indefinitely at a fixed amplitude and frequency.

The above phenomenon can be dealt with either by adding friction in the form of a steering damper, lowering the stiffness of the system by reducing castor action, or by applying psychological stimulants calculated to reduce the time lag of the rider's reflexes, so that his response has a damping and not an unstabilising effect.

The search for stability

The above analogy largely covers the gun mounting problem. The various links in the servo chain (viz. amplifier, pump, engine) all have their inherent time lags in response because they have inertia or momentum. Under certain conditions these can have a seriously unstabilising effect, the tendency towards which becomes more and more pronounced as the stiffness of the system is progressively increased. Stability must be sought by a very careful study of time constants and by providing the control damping, correct in phase and magnitude. From what has been said, it will now be clear that a complex servo is not arrived at by the random joining up of a series of components. Rather must the behaviour of each be first known and the overall response of the cyclic chain calculated (and afterwards established by experiment) before a satisfactory servo can be evolved.

The automatic control of a quantity by servo mechanisms has had a place in industry for some time. Examples are to be found in temperature controls of furnaces, CO_2 control of uptake gases, humidity controls, alkalinity regulators and others. In each case the sensitive element detects an " error " between the datum and the controlled quantity, and uses the error signal to operate a servo mechanism, which in turn applies the necessary adjustment to the apparatus until the error is nulled. These systems are characterised by a relatively slow incidence of " error," and a comparatively long time is therefore available for its correction.

In gunmountings, on the other hand, the error signal occurs with extreme rapidity, and the whole action of the servo mechanism must be very quick in response, yet stable and free from oscillations and overshoot. This calls for means of applying very rapid corrections for any tendency of the detected error to increase in magnitude, and also for precise damping of the control as the error approaches nil again.

Various methods of producing the amplification of an error voltage signal are available. Use may be made of the thermionic valve, or alternatively the error signals may be used to control a very light pilot valve of a hydraulic or pneumatic relay and so to produce the necessary amplification in an air or oil servo mechanism.

In the Service the thermionic and hydraulic servos have been those most used, although air servos are to be found in some fire control tables, and in torpedoes. Generally speaking, all three types can be made to perform the same function and the choice is largely one of practical convenience, frequently conditioned by the type of power drive that it will ultimately control.

Power drives

Gunmountings have been traditionally driven either by hydraulic engines or by electricity, and it is for these two forms of drive that servo control systems have had to be designed. Other methods of driving gun machinery may well follow, for we live in an age of gas turbines and atomic power, but hitherto the navies of the world have concentrated on the types named above, Few would dare to say that one system is altogether superior to the other, for there are so many factors which may affect the issue before the designer can make his choice. The principal claims made are as follows :—

For the Hydraulic Drive :

(*a*) For a given bulk or power, the hydraulic system is lighter ;

(*b*) It has a higher torque/inertia ratio than the electric motor, and hence uses less power to accelerate its own mass ;

(*c*) In servo mechanisms, a hydraulic system, if properly made and supplied with clean oil, should last indefinitely—whereas electric servos are liable to fall out of balance ;

(*d*) Smooth in action and sensitive in creep.

For the Electric Drive :

(i) Simple in construction, hence less maintenance ;

(ii) Less noise ;

(iii) Cleaner ;

(iv) Production is more suited to British war potential ;

(v) Less fire risk ;

(vi) The electric servo is little, if at all, influenced by temperature changes.

The first gunmounting designers to be confronted by the requirement for R.P.C. had to weigh up the above pros and cons before making their choice. They had to be guided to a large extent by what power drives were already in the ship, for much of the early work was a case of mixing new wine with old, and the percentage of new wine in the final brew had for reasons of expediency, to be kept to a minimum. The prevailing practice now is to fit hydraulic R.P.C. where turrets already have hydraulics for other services, such as rammers, hoists, etc., and to fit electric R.P.C. for smaller mountings, such as 4 in. H.A. twins that only require elevating and training machinery. In both cases, however, electricity is normally used as the means of providing the first stage of amplification of the error signal.

The development of R.P.C.

The introduction of R.P.C. into ships is to all intents and purposes a war-time development and owes much of its growth to the urgency of those times. This does not mean that the problem dates back only to the late 30's, for it had indeed been clearly recognised and appreciated many years before and several vigorous efforts had been made to compete with it. In 1922 an attempt was made to control a 15 in. turret, but in those early days the theory of servo mechanisms was not sufficiently understood to permit of a successful solution of a complex problem. Moreover, the Service still awaited the birth of the synchronous transmission system that was capable of operating a light relay in

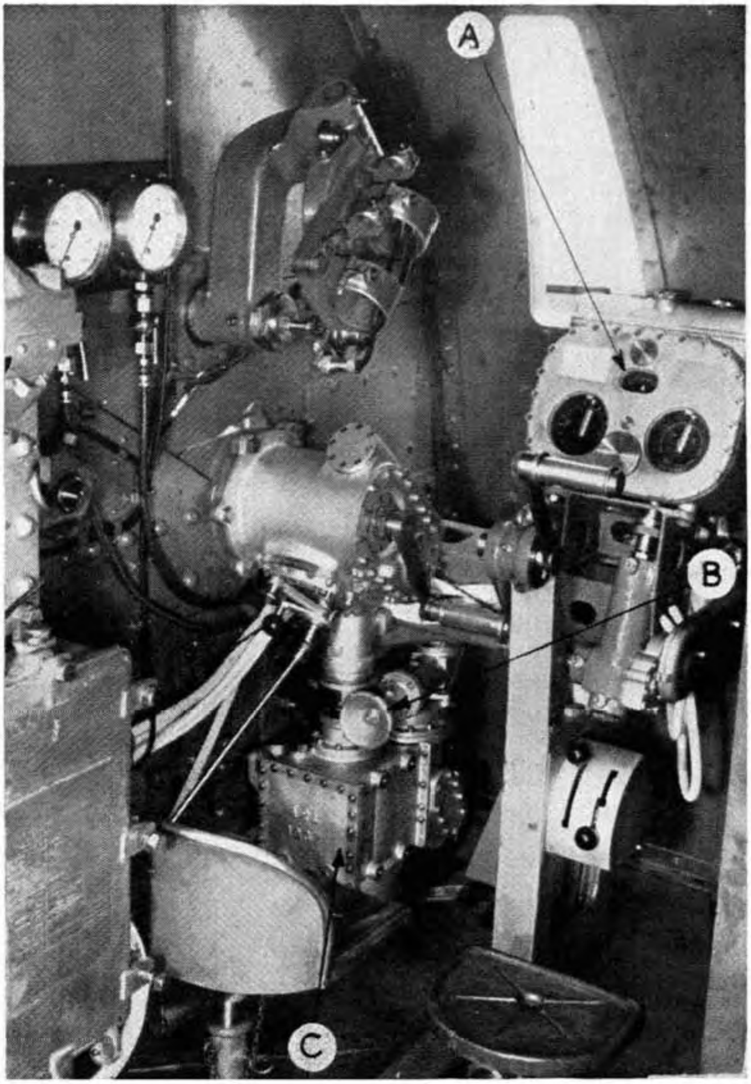

FIG. 4.—4 IN. MOUNTING WITH A.R.L. HYDRAULIC CONTROL. TRAINER'S SIDE

A.—COINCIDENCE INDICATOR

B.—TRIMMING ADJUSTMENT FOR REMOVING ERRORS IF FRICTION CLUTCHES RENDER

C.—TRAINING ENGINE

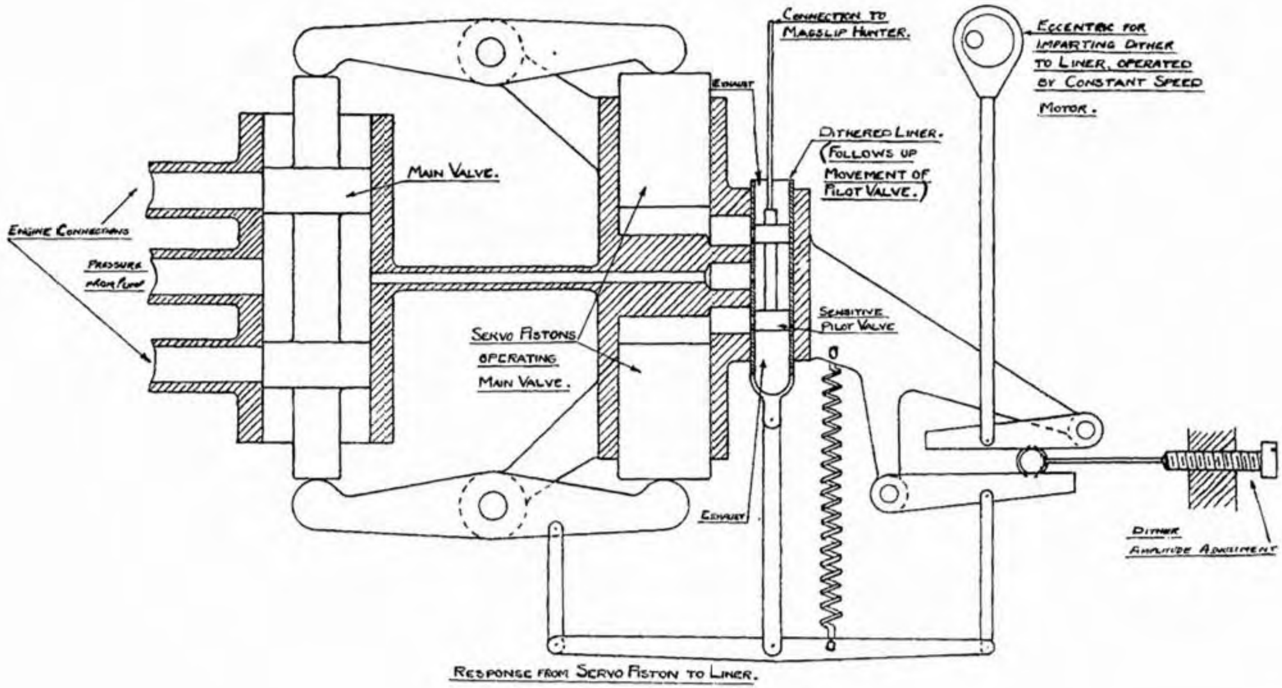

FIG. 5.—A.R.L. OIL SERVO RELAY

terms of difference in angular position between a transmitting and a receiving station.

When, in 1928, the three-element magslip chain was successfully developed at the Admiralty Research Laboratory at Teddington, remote control of the gun became a practical possibility, and in that year the Teddington Laboratory did indeed produce a workable system incorporating a magslip-operated hydraulic servo relay that was given sea trials in H.M.S. *Champion*. (See Fig. 5).

R.P.C. may be said to have been born in that year, and the rate of progress since then has been almost as much conditioned by the problem of designing a gunmounting suitable for R.P.C., as the design of the R.P.C. system itself.

An experimental valve-controlled hydraulic system was designed by A.R.L. and built into a 4 in. twin mounting in 1938 (see Figs. 1, 3, 4, 9–13)—the control incorporated velocity compensation measured in, and transmitted by, Type B oil units as a differentially added movement to the control valve. The results from this system were good and would have been better if the designers had been given greater freedom to alter the standard mounting to suit the R.P.C. system. The " G " type driving engines were of the swash plate type i.e. having non-rotating cylinder blocks with bevel gear constraint and a revolving flat valve.

The Teddington researches laid the foundation of much of the work that followed and from the original magslip system of synchronous units and the oil servo relay much of our modern technique has sprung.

During the years of intensive research for a workable and sufficiently accurate system, several schemes were pursued which for one reason or another foundered and were discarded. Some sought to make use of techniques which were not at that time well enough understood ; others were fundamentally unsound and, seen in the light of present day knowledge, were doomed from the outset. Nevertheless, from all this work two main systems finally emerged just in time for the second World War, although not by then in quantity. It had been a very near thing.

Electro-hydraulic and all-electric systems

The two systems are respectively—electro-hydraulic and all-electric. It is fortunate that two such opposite systems should have arrived at the same time, for a healthy element of competition has been aroused and each profits from the advances and mistakes of the other.

Both systems employ the same method of detecting the misalignment of gun and director and make the same first step towards processing this signal. Thereafter, one system makes use of a final stage of hydraulic, and the other of electric amplification. Misalignments are normally measured by the use of the " two-element " system of magslips, the magslips being sited at the gun and at the transmitting position respectively. The stators of these magslips each have three-phase windings, and are electrically connected to each other. The rotors are geared to their respective power drives and the transmitter rotor is supplied with single-phase alternating current of suitable frequency and voltage.

The alternating voltage in the transmitter rotor induces voltages in the three-phase stator windings. The field consequently set up in the gun magslip stator in turn induces an E.M.F. in the rotor of the gun magslip, the magnitude of which is dependent upon the axial position of the rotor in the three-phase field. When the rotor lies in the electrical neutral position in the field the induced E.M.F. is nil, but rises as the sine of the rotor's angle of rotation from that position.

We have, therefore, a convenient means of measuring an angular displacement between transmitter and follower, the accuracy of which is dependent upon the gear ratio selected for the magslip drive. Although this voltage may rise to some 35 volts, the power is extremely small and after rectification it must be

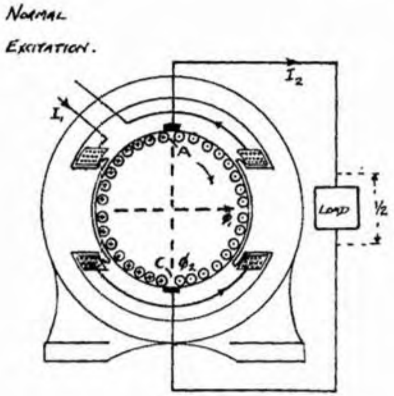

FIG. 6.—ELEMENTS OF
2-POLE D.C. DYNAMO

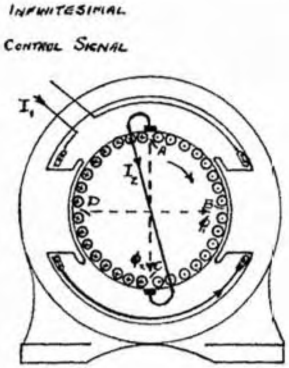

THE PRINCIPLE OF METADYNE GENERATORS

FIG. 7.—DISTINCTIVE
SHORT-CIRCUIT OF THE
ARMATURE

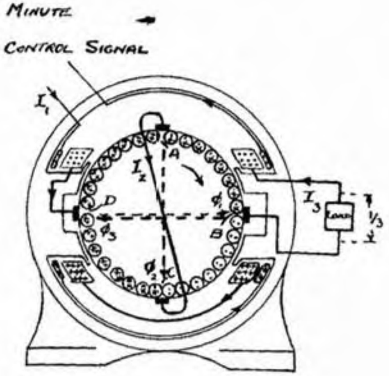

FIG. 8.—THE METADYNE
CIRCUIT

amplified by thermionic means with which engineers will be familiar. The " error " signal leaves this amplifier with the addition of a component proportional to the " rate of change of error," which serves to give added torque to the mounting when the director is accelerating and also provides the pre-retardation so necessary to brake the mounting and to prevent overshoot when running into line.

Final stage of amplification

In hydraulic mountings a final stage of amplification then takes place in an oil servo (which is virtually the descendant of its forefathers from Teddington), the servo piston of which tows the valve controlling the hydraulic engine.

The final stage of amplification in the electric system employs the Metropolitan-Vickers metadyne generator used in the Metropolitan Underground railway traction.

This system may be briefly described as follows :

The elements of a simple 2-pole D.C. generator are set out conventionally in Fig. 6. For the sake of simplicity the brushes are shown against their armature conductors and not dispersed to the commutator segments. The exciting current I_1 in the field coils produces the exciting flux ϕ_1 : the rotation of the armature in this field generates a voltage V_2 across the brushes AC. If the brushes are connected to an electrical circuit a load current I_2 will flow. In passing through the armature conductors in the directions shown in the diagram, this current produces the well-known armature reaction flux ϕ_1 at right angles to the exciting flux ϕ_2 and of the same order of magnitude.

If the load is replaced by a short-circuit, as indicated in Fig. 7, a dangerously large current will be produced. Alternatively, if the exciting current is reduced sufficiently the short-circuit current will resume its normal value I_2, and that current in turn creates the cross flux ϕ_2. Summarising events up to this stage, a minute current in the field coils has resulted in a full-size cross flux ϕ_2, through the action of the distinctive short circuit. This flux can now be utilised as the main excitation flux, in which case the armature will develop its full voltage V_3 between points B and D. If an extra set of brushes be applied at those points the load current I_3 can be drawn from that set. (Fig. 8.)

The load current I_3 may be of the order of 2,500 times the value of the signal current I_1 and the amplification of the signal power is of the order of 10,000 to 1.

It will be seen that both systems make use of the same number of power conversions. In one the links are: electric motor driving the pump—hydraulic pump—hydraulic motor. In the other: electric motor driving the metadyne—metadyne generator—electric motor. Both systems inevitably suffer losses in efficiency from these conversions.

The metadyne is a torque control system, the torque being proportional to the error signal. No such linear relationship between error signal and engine response exists in a valve-controlled system, because the speed at which the engine runs for any given valve opening is influenced by the prevailing torque ; likewise the torque is largely conditioned by engine speed, being a maximum when the speed is nil and a minimum at full speed.

Such a lack of linear relationship between the signal and either torque or speed greatly complicates the servo problem, because the performance to be expected does not yield readily to mathematical treatment and cannot therefore be accurately predicted. This is liable to lead to errors which have to be singled out and dealt with by other means. This failing has however led to a profitable line of research and the valve-controlled systems are rapidly achieving a performance hardly less satisfactory than those which enjoy a more rational mathematical basis.

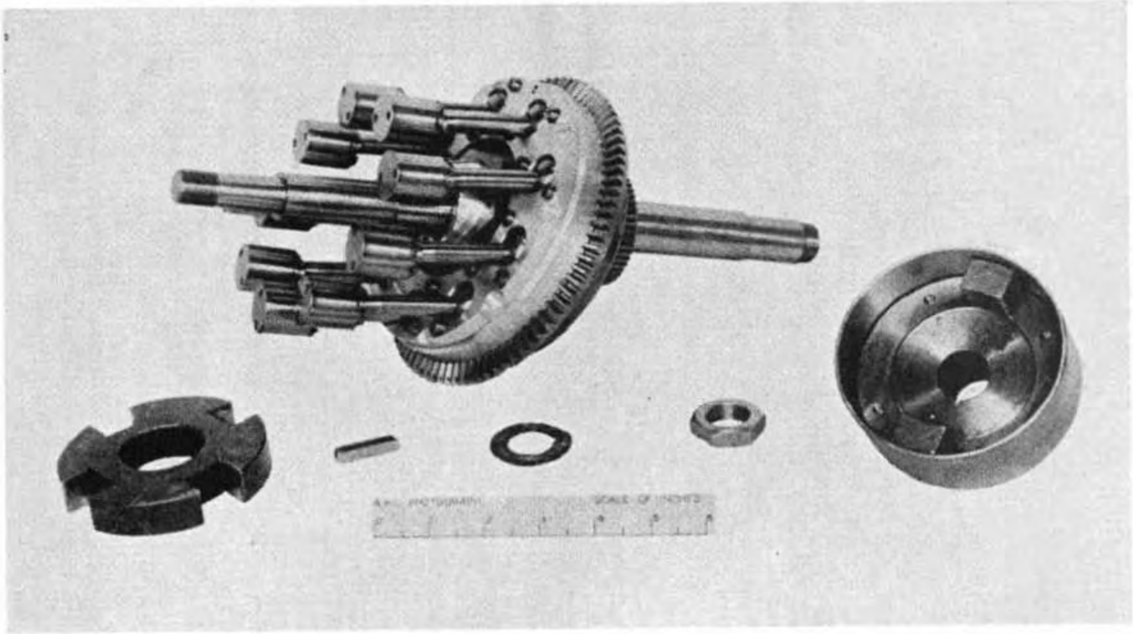

FIG. 9.—" G " TYPE MOTOR FOR A.R.L. POWER DRIVE. ASSEMBLY FOR PISTONS AND SWASH PLATE

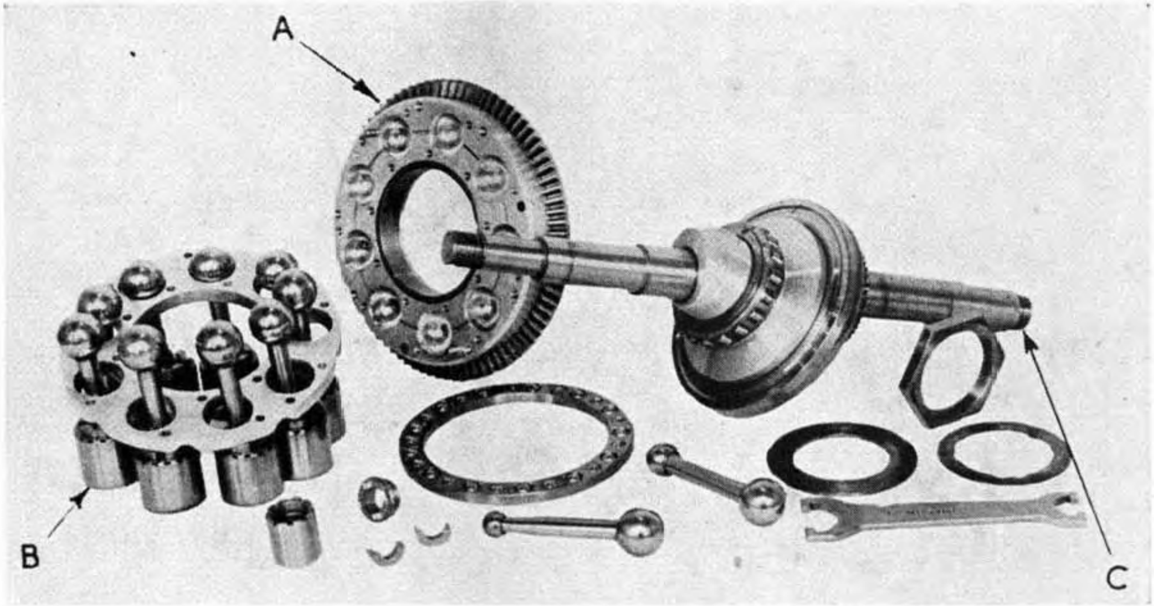

Fig. 10.—" G " Type Motor for A.R.L. Power Drive

A.—Non-rotating swash showing bevel constraint and polished sockets for ball ends of connecting rods

B.—Pistons, connecting rods and clamping ring for securing to swash plate.

C.—Driving shaft with thrust race for swash

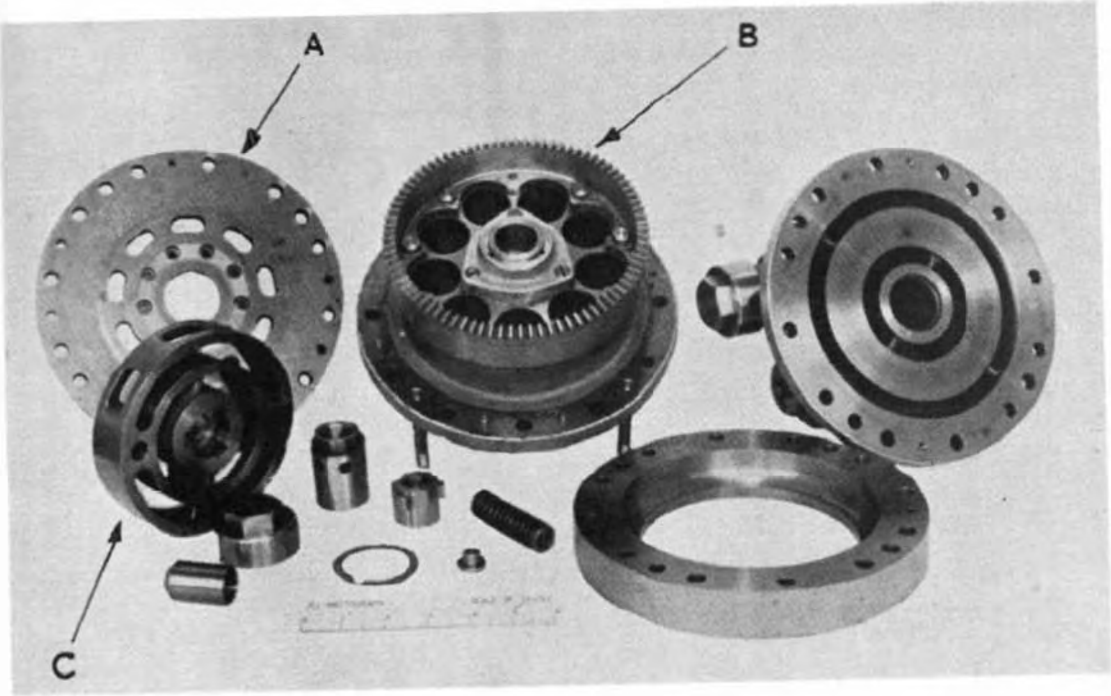

Fig. 11.—"G" Type Motor for A.R.L. Power Drive

A.—Separate end plate for cylinder block showing points. (This is provided to enable cylinder bores to be lapped)

B.—Non-rotating cylinder block showing bevel constraint

C.—Rotating Valve

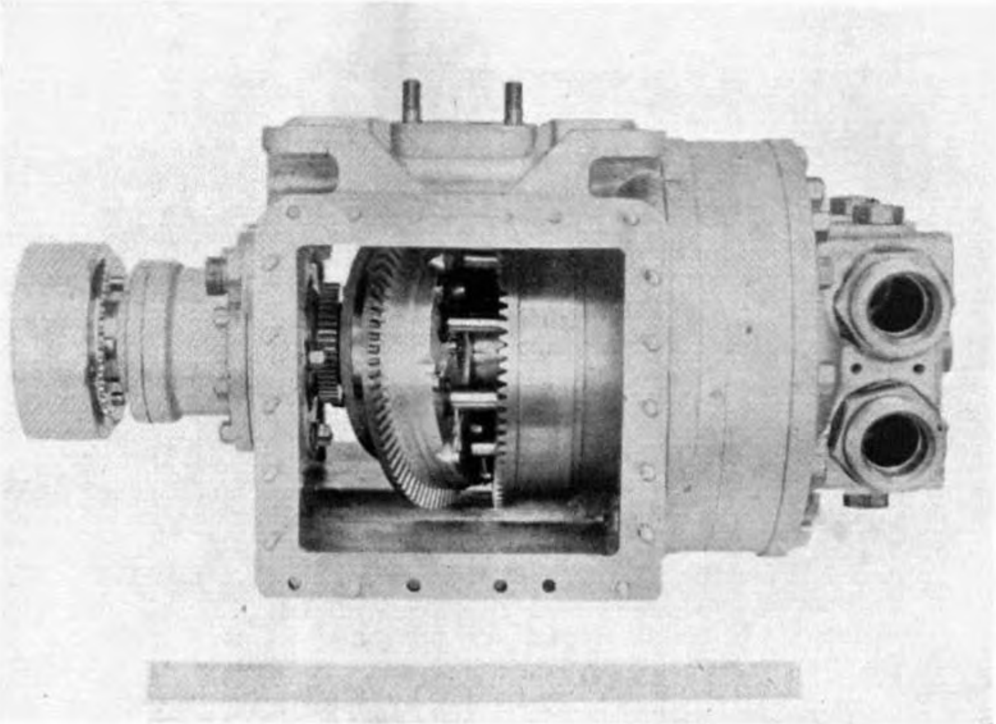

Fig. 12.—“ G ” Type Motor for A.R.L. Power Drive. Assembly with cover removed to show bevel constraint of swash

The above difficulties, coupled with the basically wasteful nature of most valve-controlled systems (in which oil is pumped up to full pressure only to be used at a lower pressure, the balance of work disappearing over the side in the form of heat), have led some to favour the system of control on the A-end (or pump), rather than on the B-end (or engine). A-end control in a modified guise is familiar to all engineer officers as the normal method of electro-hydraulic steering in ships, In gunmountings the oil servo operates the A-end stroke gear

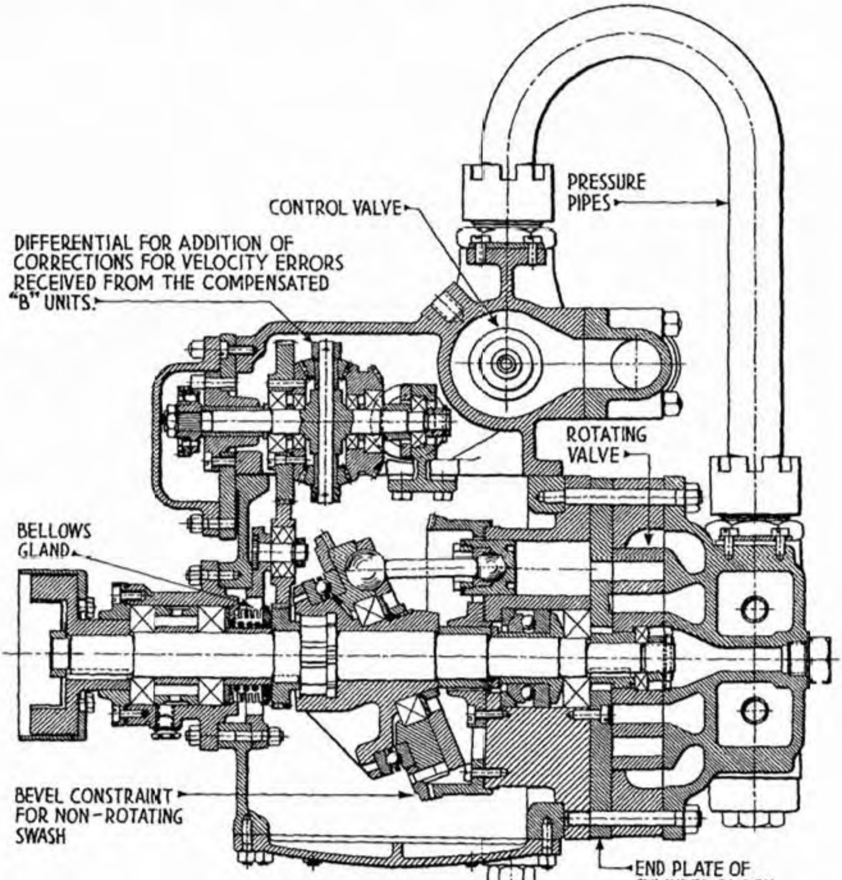

FIG. 13.—SECTION THROUGH "G" MOTOR OF A.R.L. POWER DRIVE ON 4 IN. MOUNTING. 1937

and the B-end then runs at a speed virtually proportional to the angle of tilt, or more accurately to the sine of the angle. As A-end tilt angle and B-end speed are thus related, then the speed of tilt and engine acceleration are similarly identified, and this linearity is very beneficial to servo design.

This system, which has found high favour in America, suffers from certain inherent complexities, and is more bulky, heavy and costly than a valve-controlled installation because each motion demands an additional pump and driving motor. This is to a certain extent off-set by the freedom from pipe lengths, leaks and other disadvantages of a minor order. Both systems work well in practice, the valve system which is mechanically simple, starting with an initial handicap originating from the complex nature of its principles, whereas the pump controlled system has many disadvantages from the mounting designers' point of view.

We thus find ourselves possessed of at least three good, proved and workable systems from which to choose in the future. These are by no means all, for other systems have been tried with success at home and abroad, in ships, tanks and aircraft, but it is too early to say whether any one method of positional control will ever rise to an unchallenged supremacy. The wide diversity of applications would seem to make this unlikely.

The art of servo mechanisms is rapidly becoming a special branch of the science of engineering with its own literature, language and techniques. It will long remain the happy hunting ground of mathematicians, of hydraulic, electric, mechanical and production engineers, and the best servo will be the one that is a true blend of sound theory, progressive design and high quality production engineering.

The development of R.P.C. in this country has had many setbacks and delays due to wrong thinking ; attempting to fit a system to a standard mounting; developing a system that had not been first proved by theoretical analysis to be workable ; also at times to a lack of appreciation of the need for precision engineering in a product which itself aims at giving a very precise output ; to our woeful lack of precision engineering potential and to other causes on which it is at times painful to reflect. Nevertheless progress continues and the standard of performance steadily rises. It is now no longer a case of splicing the main brace when a sleeve target is shot down from its slow, steady and unwavering course, and the slaughter of V.1 missiles in the fields of Kent and Sussex showed clearly that, if the computer gives the right signal, a well-designed and suitably engineered R.P.C. system will do the rest.