BRITISH NAVAL GAS TURBINES

BY

COMMANDER (E) G. F. A. TREWBY, A.M.I.MECH.E., M.I.MAR.E., R.N.

Paper to be read before the Institute of Marine Engineers in London on 13th April 1954, also before a combined session of the American Society of Mechanical Engineers and the Society of Naval Architects and Marine Engineers in New York on 27th April 1954.

PART I

Introduction

It was not until the pioneer work of Sir Frank Whittle had produced the first British aircraft jet engine in 1941 that serious consideration was given to the development of naval gas turbines. At this time the R.A.E. Farnborough were also actively engaged in gas turbine development and their first design, manufactured by Metropolitan Vickers, ran in December 1941. The idea of using a naval propulsion unit based on the aircraft type of gas turbine was first discussed between Metropolitan Vickers and members of the Engineer-in-Chief's Department of the Admiralty in 1942 and a contract for the construction of three complete ' Gatric ' engines was placed in August 1943.

In the ten years since this contract was placed six separate designs have been developed and tested under Admiralty contract and a further two designs have been bought direct from manufacturers for evaluation and testing. Several of these gas turbines represent considerable advances in naval engineering and merit individual papers to themselves. The present paper aims only at presenting a general picture of the current state of British naval gas turbine development, with a review of the operating experience to date and the lessons learned. In the conclusions the factors affecting the future role of this new prime mover in the Royal Navy are discussed.

The paper is divided into three main sections :—

I—Propulsion Machinery for Warships.
II—Propulsion Machinery for Landing Craft and Ships' Boats.
III—Auxiliary Machinery.

Appendix A gives design and constructional details of the naval gas turbines described while the cycle diagrams with operating pressures and temperatures are shown in Appendix B.

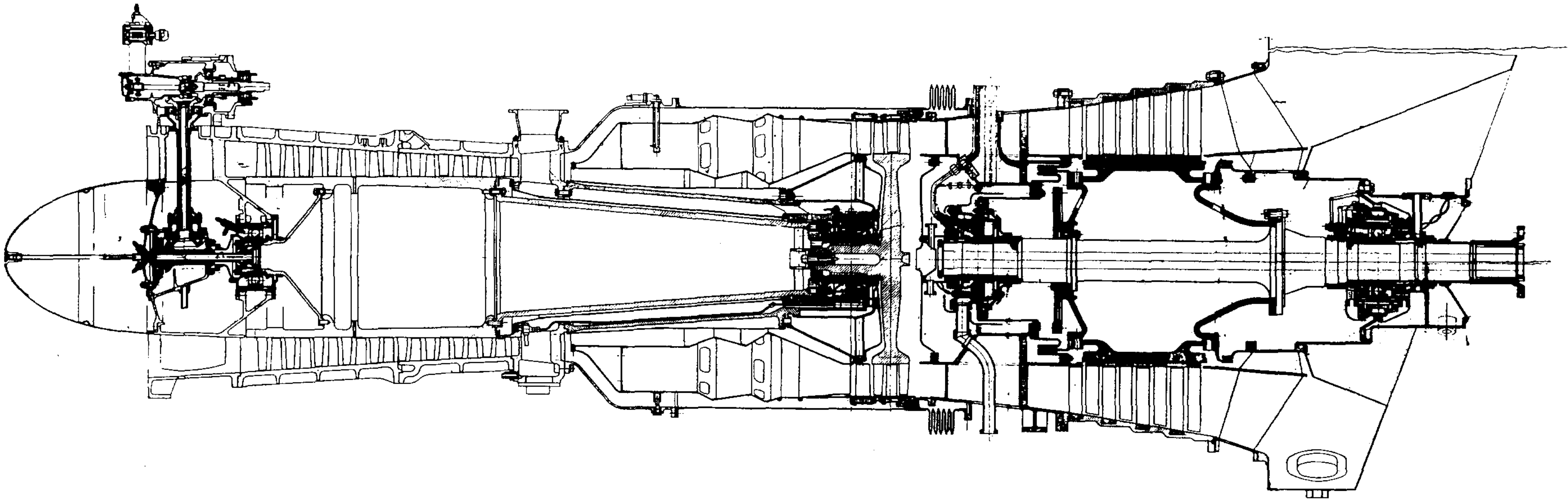

FIG. 1—SECTIONAL ARRANGEMENT OF 'GATRIC' GAS TURBINE

SECTION I

PROPULSION MACHINERY FOR WARSHIPS

Requirements for Naval Propulsion Machinery

In order to obtain a clear appreciation of the background underlying the development of naval gas turbines, it is necessary to understand the requirements and operating conditions for naval warship propulsion machinery. The requirements vary with the duties of each particular type of vessel and as new weapons and tactics evolve, the relative importance of the factors alter. But, with very few exceptions, the propulsion machinery for all warships must be designed to meet the following specification :—(1, 2, 20)*

(*a*) Minimum weight (including fuel) to meet the specified endurance.
(*b*) Minimum space.
(*c*) Good thermal efficiency over a wide range of power, with particular emphasis on the cruising power.
(*d*) Maximum reliability.
(*e*) Ease of maintenance : in particular ease of component replacement.
(*f*) Maximum manœuvrability, including rapid starting and reversing.
(*g*) Ease of control and simplicity of operation.
(*h*) Low noise level and ability to withstand shock and other battle damage.
(*i*) Economy of strategic materials and production effort.

Many of these requirements conflict and any design must necessarily be a compromise.

Operating Conditions for Naval Propulsion Machinery

Records of the operation of naval warship propulsion machinery at varying powers show that, except for certain special types of vessels such as high speed coastal craft, the major proportion of operating time is spent at a low percentage of total installed power. This cruising power at which the majority of time is spent lies between 5 per cent and 30 per cent of total installed power in most warships and it is essential that the endurance (and hence the efficiency of machinery) should be as high as possible in this range. Perhaps the extreme case is that of a destroyer where (according to U.S. naval sources) 70 per cent of the total installed power is used for only 1 per cent of the total steaming life (1). Since warships very seldom use full speed, the life of naval machinery at high powers can be extremely short judged by commercial or merchant marine standards and this fact is of great significance when considering the application of the gas turbine to warship propulsion.

Naval vessels must also be able to get under way in the shortest possible time, without previous warning, and proceed to sea at high speed often after violent and unassisted manœuvring ; then alternatively cruise at fractional powers for long periods and at full power for short periods. Sudden manœuvring may occur at any time and it is desirable that full power should be instantly available.

One of the most obvious naval gas turbine applications is for the propulsion of high speed coastal craft where the characteristics of this new prime mover can be used directly to obtain higher speeds. In many ways this is an ideal application and, being the most straightforward (as far as propulsion machinery is concerned), the progress in this field has been more rapid than elsewhere. Two different designs of simple gas turbine, the ‘ *Gatric* ’ and ‘ *G2* ’ have already been operated at sea in naval coastal craft.

---

* Figures in brackets denote references given at the end of the Paper.

‘ GATRIC ’ GAS TURBINE

(*Appendix A, column 1*)
(*Appendix B, diagram 1*)
(*Refs. 1, 2, 3, 4, 5, 6*)

Introduction

A contract for three simple cycle gas turbines, based on the *F2* aircraft jet engine but with an output turbine fitted in the tail pipe, was placed with Messrs. Metropolitan Vickers in August 1943. The main object of the contract was to gain experience with the only type of gas turbine then available in Britain, a short life aircraft unit. The project was given the code word *Gatric* and a sectional arrangement of the engine is shown in FIG. 1.

The *F2* ran on kerosine and as this fuel was not considered suitable for naval applications the first part of the work consisted in developing the combustion system of the engine to burn Diesel oil. It was found that very few modifications were necessary. Carbon formation was experienced at first, but with minor alterations to the fuel jets and the size and position of the holes for the admission of primary and secondary air, together with a slight increase in diameter of the annular combustion chamber, satisfactory combustion was achieved.

Bench tests on the first complete engine began in April 1946 and some alteration to the capacity of the compressor turbine was found necessary before the designed performance could be achieved. This alteration brought the turbine working line too close to the compressor surge line at low powers and blow-off valves at the fifth compressor stage were necessary to facilitate starting. The specific fuel consumption of the *Gatric* at various powers obtained during shore testing is shown in FIG. 2, together with the performance curves of other naval propulsion gas turbines.

Installation of the first engine in *M.G.B. 2009* (later renumbered *5559*) was completed in July 1947 and in August of that year *M.G.B. 2009* made history by being the first vessel in the world to be propelled at sea by a gas turbine (FIG. 3) just 50 years after the trials of the *Turbinia*. The main objectives of this development were to gain experience of installing, operating and maintaining a gas turbine at sea. Details of the arrangement in *M.G.B. 2009*, in which *Gatric* replaced the centre of three Packard gasoline engines, are shown in FIGS. 4 and 5 and the arrangement of air inlet ducting to the compressor and the air circulation past the gas turbine are clearly visible.

During the early sea trials trouble was experienced with bad temperature distribution at outlet from the combustion chamber. This resulted in distortion of the combustion chamber and overheating of the first stage power turbine blades. By this time Messrs. Metropolitan Vickers had successfully developed a film cooled chamber and when this new design was incorporated in the engine of *M.G.B. 2009*, no further trouble was experienced. It did not, however, completely eliminate stratification and some 50° C. variation in the readings on the four thermocouples fitted at the power turbine inlet remained.

Lessons learned from ‘ Gatric ’ Trials

Sea trials of the *Gatric* gas turbines in *M.G.B. 2009* continued over a period of four years and were remarkably trouble free. At the end of this time the following points were established :—

(*a*) *General.* The operation of a simple gas turbine at sea was a practical proposition which presented no insuperable difficulties, and the general characteristics of this new prime mover were particularly well suited to the propulsion of high speed coastal craft.

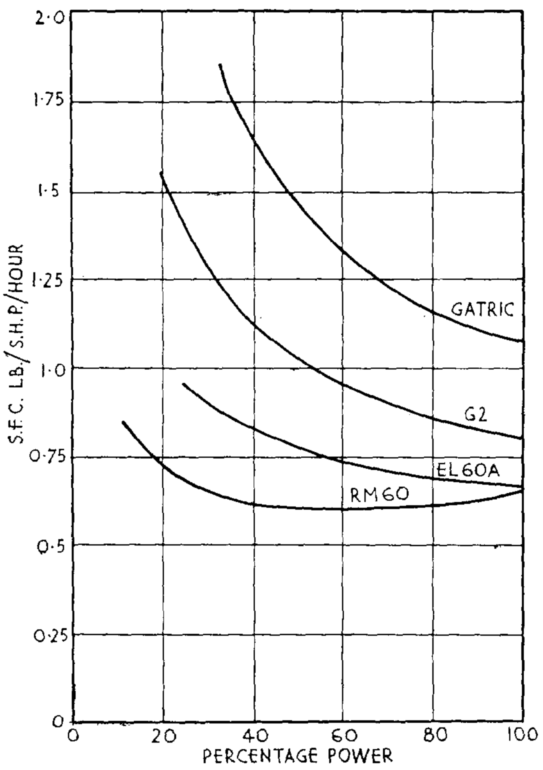

FIG. 2—SPECIFIC FUEL CONSUMPTION OF PROPULSION GAS TURBINES. ACTUAL TEST RESULTS USING ADMIRALTY DIESEL FUEL (GAS OIL), CALORIFIC VALUE 18,500 B.TH.U./LB.

(*b*) *Compressor fouling.* The deterioration in gas turbine performance caused by compressor fouling is well known and it was anticipated that the salt-laden atmosphere might affect the performance of naval gas turbines, particularly in a comparatively small high speed vessel such as *M.G.B. 2009.* The air intake arrangements shown in FIG. 4 were therefore designed to prevent salt spray entering the compressor ; air being drawn from a sheltered position abaft the bridge and passed through a settling tank before reaching the compressor inlet. This arrangement was not entirely effective, however, and after 120 hours running, the compressor efficiency had fallen to 94 per cent and the engine output to 86 per cent of their design values. Examination showed that the deterioration was caused by salt deposit on the compressor blades. To overcome this fouling problem a waterspray ring containing five equally spaced nozzles was fitted in the compressor inlet. A ten-gallon injection of distilled water with the gas turbine running increased compressor efficiency and output to 98 per cent and 97 per cent of design and a second injection restored them to their design values. A routine was then established in which 10 gallons of water were injected at the rate of about 2 gallons per minute every 3 to 12 hours, depending upon the drop in engine performance. This simple procedure was completely successful in combating the effects of compressor fouling both from salt spray and fog. Similar injection equipment has been fitted to the later *G2* and *RM.60* gas turbines.

(*c*) *Bearings.* Two bearing failures were experienced near the completion of the sea trials of *Gatric* and it began to appear doubtful if ball and roller bearings were capable of withstanding the high speeds and temperatures associated with gas turbines for long periods, particularly under seagoing conditions. In neither case was the cause of failure established.

(*d*) *Noise levels.* Before any silencing action was taken a noise survey was carried out and it was found that the greatest noise level in the engine room, 117 decibels (db), originated from the gas turbine gearbox. On

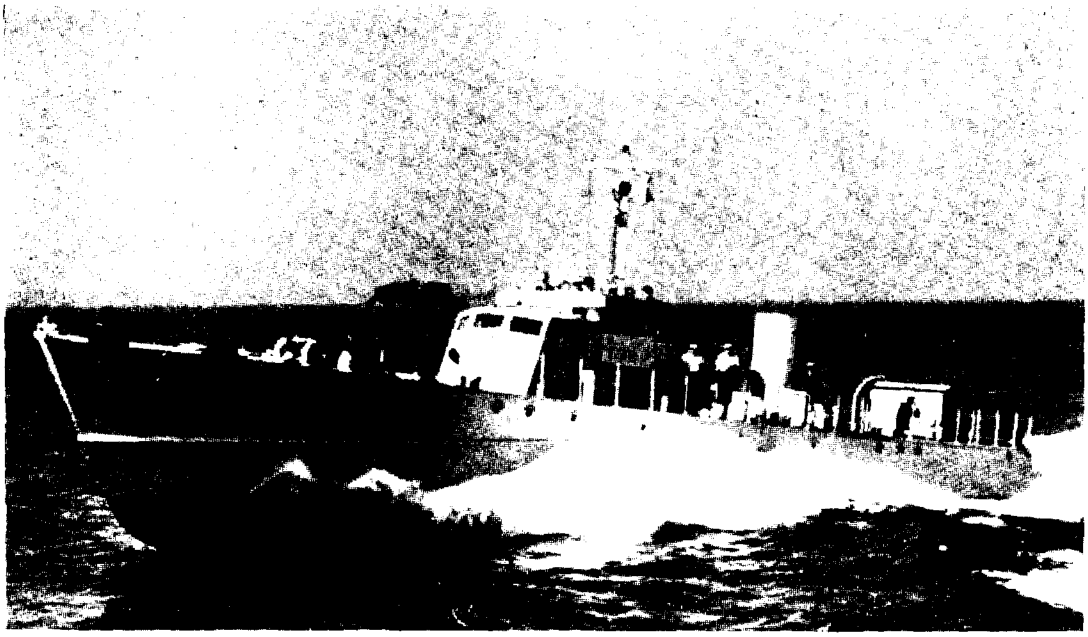

FIG. 3—M.G.B. 2009 IN THE SOLENT, AUGUST 1947
[*By courtesy of the* "Sunday Graphic."

deck, just aft of the bridge, the level was also 117 db, the major source being traced to the compressor air intake ; on the bridge itself noise from the funnel predominated, the total level being 102 db.

The most serious component of noise was considered to be the high frequency note emanating from the axial compressor and transmitted through the air intake trunking and settling chamber. By lining the settling chamber with ' Fibreglass ' and fitting ' splitters ' of the same material in the air intake, a reduction in the compressor blade note of 39 db was achieved. This reduction made possible a more accurate evaluation of the exhaust noise and it was found that the compressor blade note was present there also. Silencing equipment including a ' torpedo type ' splitter was fitted in the funnel and was most effective in reducing funnel noise.

(*e*) *Compartment cooling and heat insulation.* Owing to the proximity of two Packard gasoline engines great care was necessary in the design of *Gatric*'s heat insulation and it was decided to enclose the entire engine in a ventilated casing (see FIG. 4). The gas turbine itself was lagged with 2-inch asbestos mattresses and a light metal casing was fitted over this lagging, but not in contact with it. Air was drawn between the casing and lagging by an engine exhaust operated ejector in the funnel. This method of cooling the gas turbine and the compartment by means of airflow insulation was extremely effective and the principle has been used in later installations. (A 12½-inch fan was originally fitted to supply air to the engine casing but the exhaust ejector in the funnel proved so efficient that the fan was removed).

(*f*) *Compressor blade material.* The original *Gatric* compressor blades were of *R.R. 56* anodised by the chromic acid process. Examination after the first 50 hours running revealed that the blades had suffered local intercrystalline corrosion, the average depth being 0·005 to 0·01 inches. The blade material was changed to *R.R. 57* and no further corrosion was experienced although it might still occur in the absence of water washing.

(*g*) *Loss due to trailing.* Initially *Gatric* was fitted with a clutch located between the propeller and reduction gear (and integral with the gear) to prevent the free power turbine from trailing when the boat was powered only by the gasoline engines. Trials indicated that this clutch was unnecessary however, since the power lost in 'windmilling' the turbine with both gasoline engines developing full power was only 1·3 per cent, corresponding to a boat speed of 0·18 knots.

Residual Fuel Tests on 'Gatric' (7, 8)

Concurrently with the sea trials, testing was carried out with the other two *Gatrics* at Metropolitan Vickers' works and the Admiralty Engineering Laboratory. The engines were used for proving new components and for trials with various types of fuels including residual boiler fuels. The residual fuel tests included a continuous run of 48 hours at maximum cruising load and showed that the engine was capable of running for limited periods on residual fuel oil to Admiralty standard specification. The materials of construction stood up well with the exception of the fuel jet shields and, on the whole, the engine was less adversely affected than anticipated.

A total of 200 hours running on residual fuel was completed at the Admiralty Engineering Laboratory and from the appearance of the engine after the tests, it was predicted that 1,000 hours could have been completed without unacceptable loss of performance or failure of the turbine blade materials.

As a result of these trials equipment for burning residual fuel, including an exhaust operated fuel oil heater, was fitted in *M.G.B. 2009* but only one short run could be completed before the hull was condemned and the vessel scrapped.

The principal lessons learned from the residual fuel trials with *Gatric* engines were :—

(*a*) That a high degree of filtration of the fuel was necessary.

(*b*) That it is preferable to pump the oil cold if wear of the pumps is to be kept to a minimum.

(*c*) That exhaust heating of the fuel is a practical proposition.

(*d*) That a simple naval gas turbine operating with a maximum gas temperature of 750°C (1,382°F) can burn a residual fuel oil for limited periods.

'Gatric' Life

It should be noted that although *Gatric* was designed for a life of only 300 hours, two of the engines have now operated for nearly 600 hours and this brings home the important point that when the 'life' of a gas turbine has expired, it means only that certain components require renewal. It does not involve scrapping the whole engine as was originally supposed in some quarters.

'G.2' GAS TURBINE

(*Appendix A, column 2*)
(*Appendix B, diagram 2*)
(*Refs. 9, 10*)

Introduction

The *Gatric* project was originally planned as a convenient floating test bed for the only kind of gas turbine then readily available—a short life converted

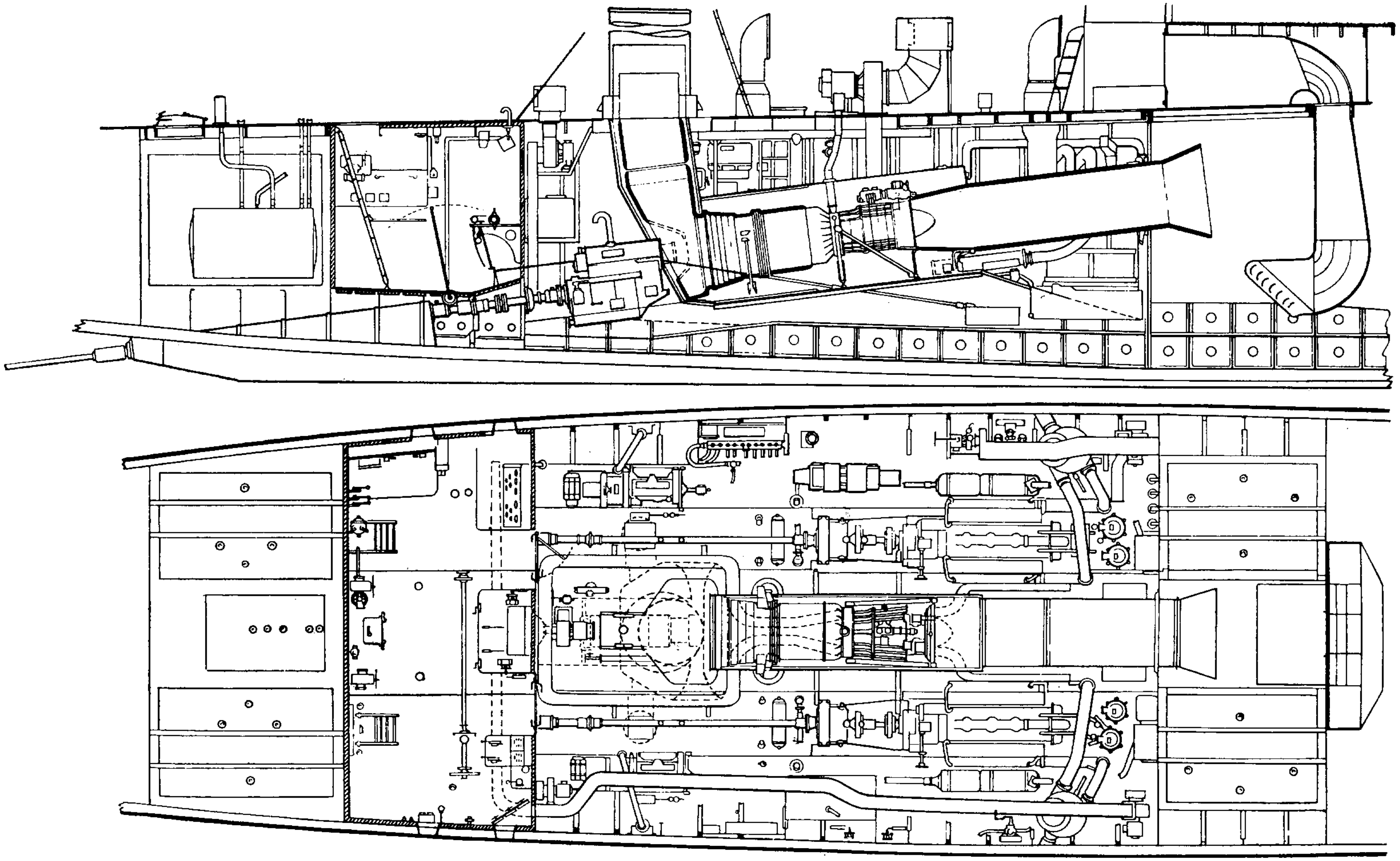

FIG. 4—DETAILS OF 'GATRIC' INSTALLATION IN M.G.B. 2009

aircraft unit. But it soon became apparent that this type of engine had many advantages for the propulsion of high speed craft and consideration was given to further installations on these lines.

In December 1948 a contract was placed with Messrs. Metropolitan Vickers for the design and manufacture of four larger gas turbines based on the *Beryl* aircraft jet engine, but with the addition of a separate power turbine driving the output shaft through single helical reduction gearing. This design, known as the *G2*, was ordered for installation in two fast patrol boats, *Bold Pioneer* and *Bold Pathfinder*. The gas turbines were intended for use at high speed only, Diesel engines being fitted for manœuvring and cruising. Each engine drives a separate shaft, the two gas turbines being on the wing shafts and the Diesel engines on the centre shafts. FIG. 6 shows a sectional arrangement of the *G2* gas turbine and a photograph of the engine in the makers works is shown in FIG. 7.

Shore Testing

Manufacture of the first *G2* was completed in 1951, but initial testing revealed that the power turbine was not correctly matched with the gas generator, the maximum power available at the designed gas temperature being 3,800 h.p. Since manufacture of modified power turbine nozzles would have involved considerable delay, it was decided to install the first two *G2*s at the reduced rating in order to obtain early sea experience.

The third engine with modifications to improve matching went on test at the firm's works in December 1951, and the specific fuel consumption obtained over the whole power range is given in FIG. 2. It will be seen from this figure and Appendix A that the *G2* gas turbine has a much improved fuel consumption compared with the *Gatric*, a lower specific weight and a longer life. This great improvement in performance achieved over a period of five years is most encouraging and there is every indication that the trend will be continued in future designs. During shop trials noise measurements were taken and it was found that the noise level beside the engine was 102 decibels under idling conditions rising to 114 decibels at full power.

Installation Arrangements in ' Bold ' Boats

A diagram illustrating the installation arrangements of the G2 gas turbines in the *Bold* boats is shown in FIG. 8, while FIG. 9 is a photograph showing *Bold Pioneer* at speed. The air intake and airflow cooling arrangements are similar to those employed with *Gatric* in *M.G.B. 2009* ; the ejector effect of the exhaust gases being used to draw air into the engine compartment and over the hot parts of the gas turbine, thereby providing an airflow insulation system considerably lighter than conventional lagging. No clutch is provided, the gas turbines being connected directly to the propeller shafts through a reduction gear of 4·73 to 1. Starting is by means of a small swashplate air motor which can be seen on the top left of the compressor in FIG. 7. *Gatric* had been started very successfully by an electric motor but as an air supply was necessary in the *Bold* boats for starting the Diesel engines it was decided to adopt this method for the gas turbines also.

Trials at Sea

Sea trials of the *G2* gas turbines in the *Bold* boats began towards the end of 1951 and many more problems have been encountered than in the original *Gatric* installation.

The first was inadequate gearbox scavenge pump capacity. Originally

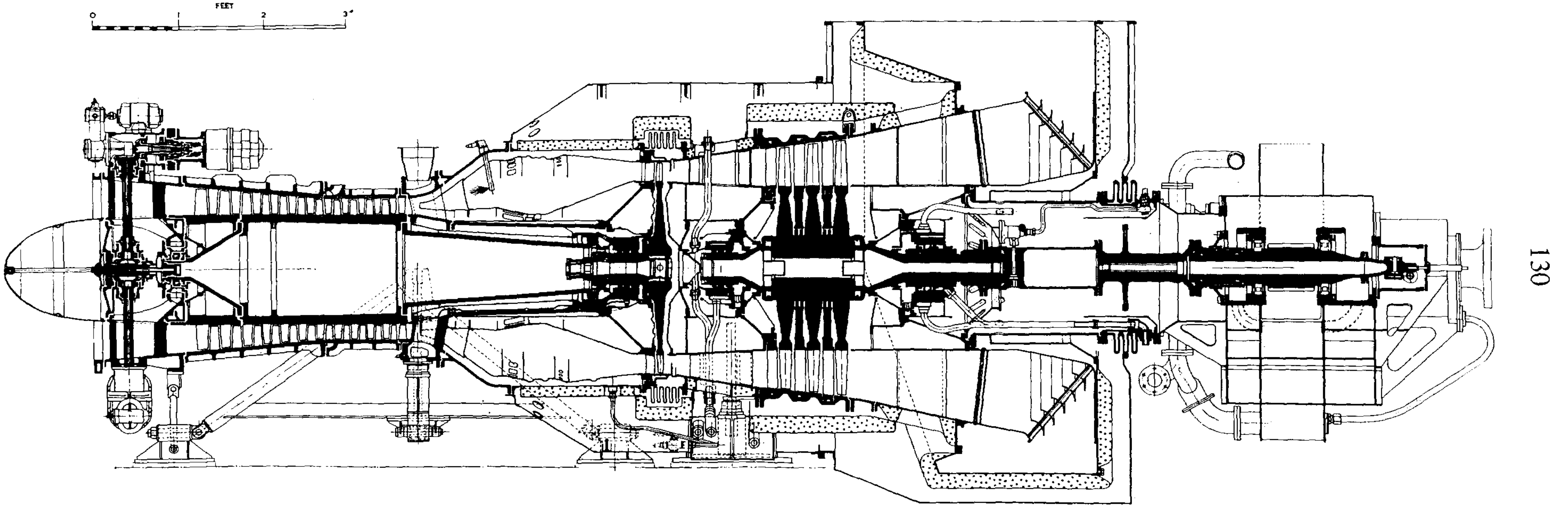

Fig. 6—Sectional Arrangement of 'G2' Gas Turbine

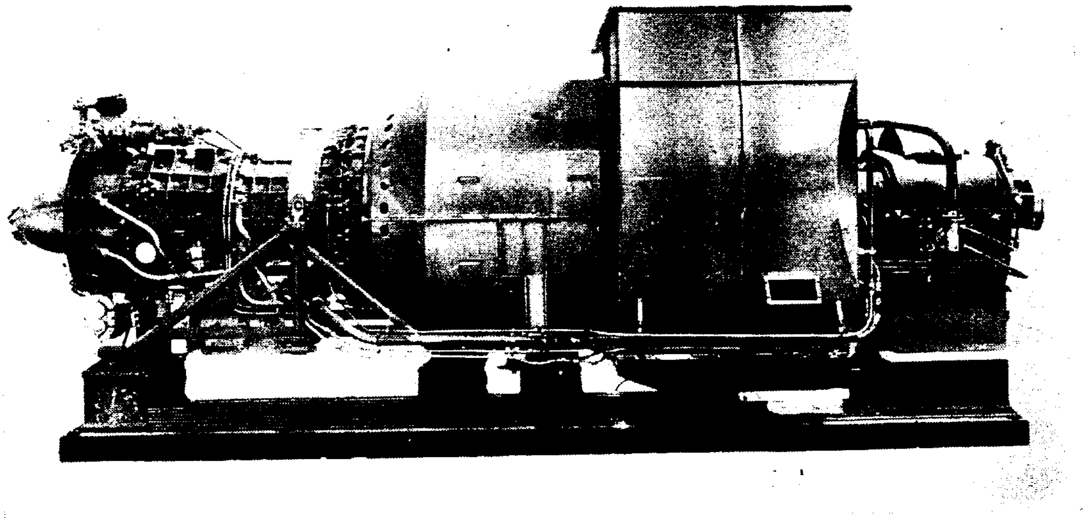

Fig. 7—'G2' Gas Turbine on Test Stand

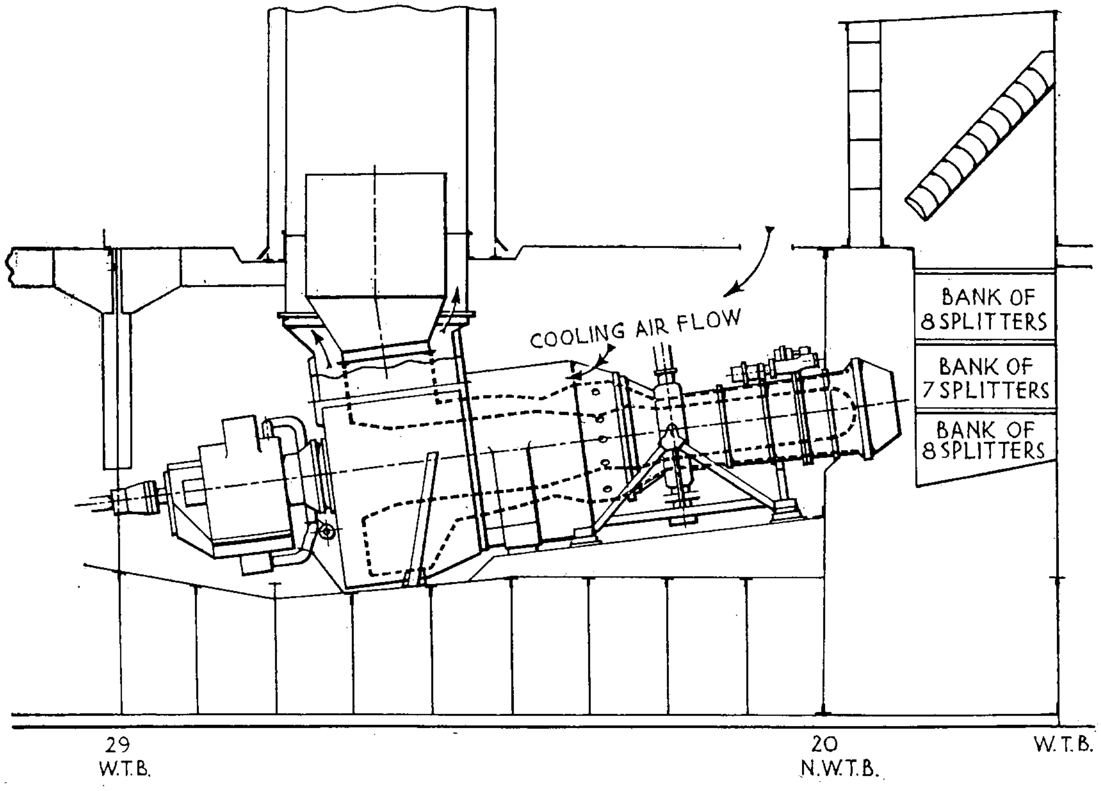

Fig. 8—Installation of 'G2' Gas Turbine in 'Bold' Boats

two 35 g.p.m. scavenge pumps and a single 35 g.p.m. pressure pump were fitted but it was found that the capacity of the two scavenge pumps operating in parallel from a single suction pump was not adequate and flooding of the gearbox resulted. The trouble was overcome by fitting a single 45 g.p.m. scavenge pump and restricting the capacity of the pressure pump to 25 g.p.m.

After some 50 hours operation in *Bold Pathfinder* repeated stalling of the starboard gas turbine occurred at gas generator speeds of about 5,500 r.p.m. There was no apparent loss of power or excessive vibration and the gas temperatures were normal. As the compressor approached the stalling speed a

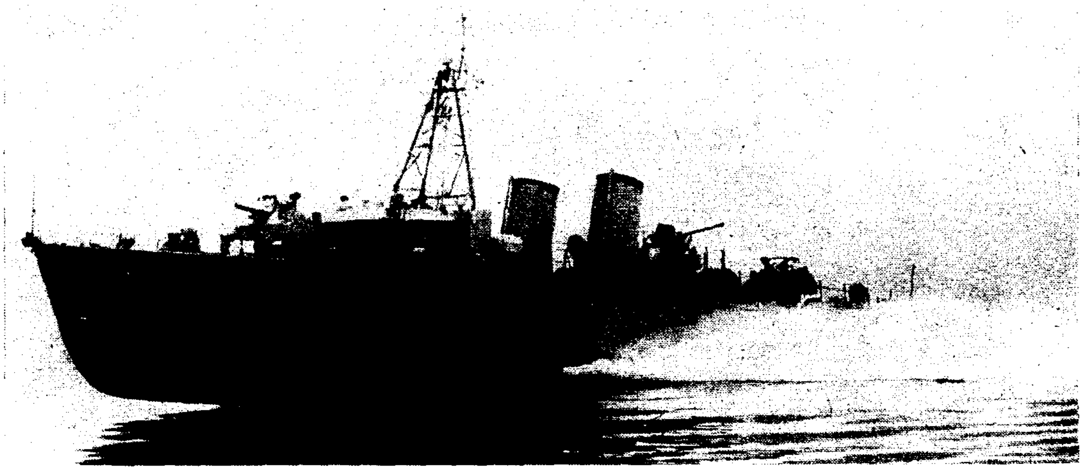

FIG. 9—H.M.S. 'BOLD PIONEER'

[*By courtesy of* "The Times."

slight internal rumbling sound could be heard which suggested the onset of compressor surge. On opening up the compressor it was found that six blades from the last moving row were broken near the root and all bore the characteristics of fatigue failure. Some of the blades had passed through the combustion chamber and had satisfactorily aluminised the compressor turbine without any apparent damage!

It was known that the natural frequency of the last compressor blade row coincided with a possible excitation from the ten outlet struts at 5,500 r.p.m., but it was thought that the two rows of fixed guide vanes would prevent excitation from this source. Closer examination of the design, however, indicated that the proximity of the struts to the last row of guide vanes and the aerodynamic shape of the passages between the unstaggered struts would aggravate rather than dissipate an excitation from the outlet struts. FIG. 10, showing an expanded plan view of the last rows of compressor blading and the outlet struts as originally fitted, illustrates this point. The defect was cured by removing the second row of outlet guide vanes and modifying the first row to suit, as shown in FIG. 11. The space left between the guide vanes and the outlet struts was then sufficient to dissipate any upstream disturbances and no further trouble has been experienced from this source.

As an additional precaution automatic air blow-off valves have been fitted which are open on starting and close at a gas generator speed of 6,500 r.p.m. These minimize the risk of surging which would greatly increase any excitations set up from the outlet struts.

No sooner had this defect been successfully overcome than another vibration problem arose, first manifesting itself in the starboard gas turbine of *Bold Pioneer*. A first row compressor moving blade failed causing considerable consequential damage. This particular blade had been noted as slightly damaged when the compressor was opened up after the acceptance trial, presumably by the passage of some foreign body through the compressor. This fact tended to obscure the real cause of failure but was a timely reminder of the very severe damage which can arise if any loose gear, etc., gains access to the intake ducting of gas turbine installations.

About five months later some second stage fixed and moving blades of *Bold Pathfinder*'s starboard gas turbine failed. A thorough investigation was then made into the cause of failure including the fitting of strain gauges on compressor blades to determine the conditions at which excessive amplitudes occurred. As a result it was definitely established that both failures had been

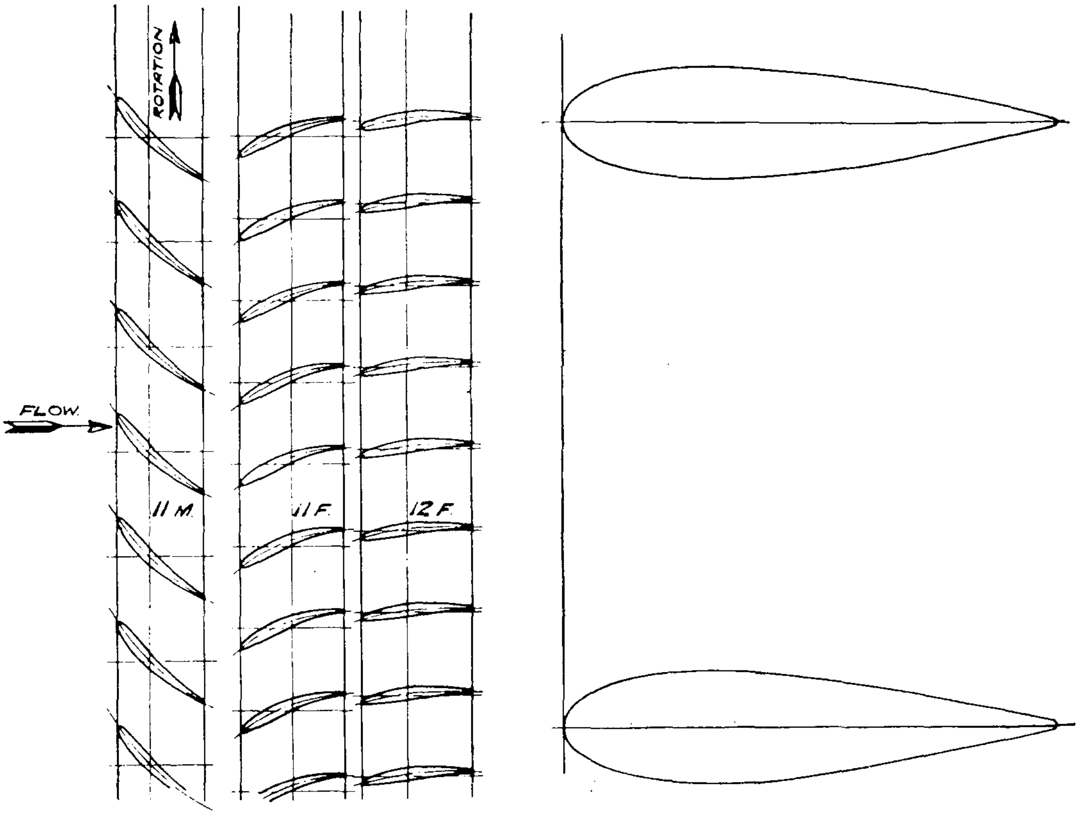

FIG. 10—DETAILS OF 'G2' COMPRESSOR BLADING AND STRUTS AT OUTLET END—BEFORE MODIFICATION

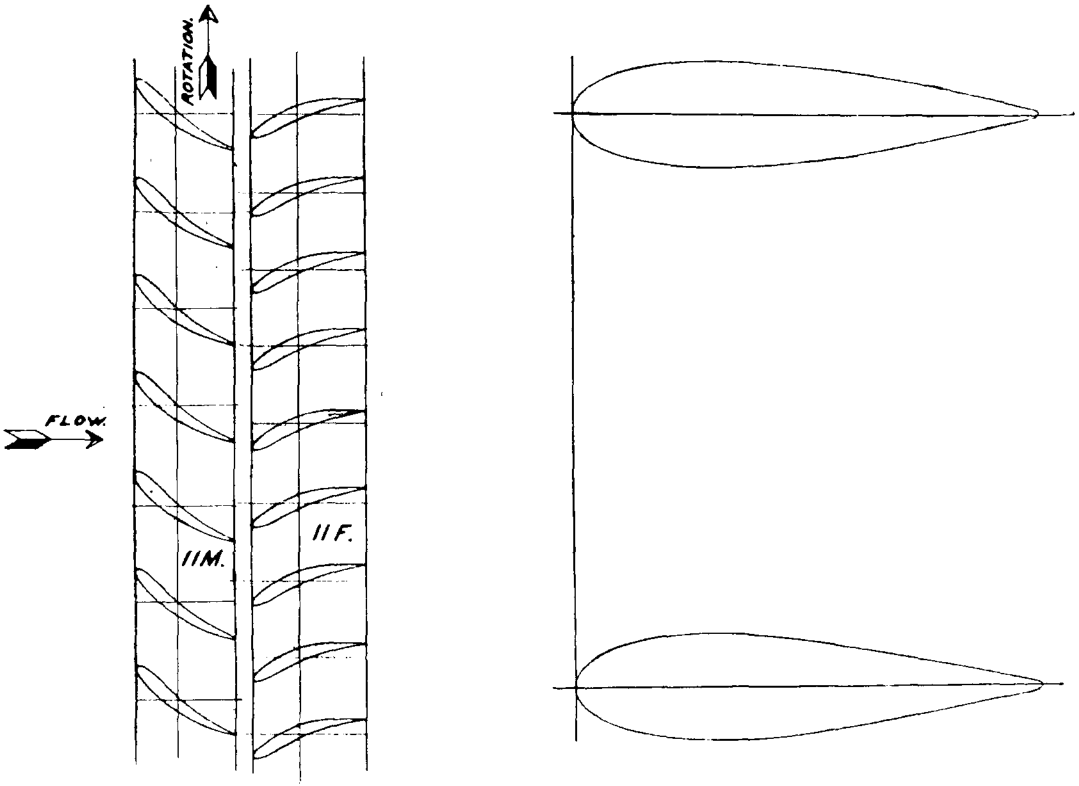

FIG. 11—DETAILS OF 'G2' COMPRESSOR BLADING AND STRUTS AT OUTLET END—AFTER MODIFICATION

caused by ' rotating stall '. This is an aerodynamical effect which is liable to occur when the L.P. stages of axial compressors go into stall at low speeds. (A brief explanation of this phenomenon is given in the footnote below.)

The blade vibration tests showed the existence of a group of gas generator speeds between 3,000 and 4,800 r.p.m. at which resonant vibration was likely to occur. This is below the normal propulsion range, but includes the speed at which the engines have been run after periods at high power to cool the bearings prior to shut down. The gas generator speed for idling and cooling down has been temporarily raised to 5,000 r.p.m. and design modifications to ensure the safety of the blading over the whole operating range are being investigated.

An interesting point arising from the three blade failures described above is that the *G2* compressor is closely similar to that of the *Beryl* Mark I jet engine which had successfully completed an Air Ministry type test. The fact that an aircraft engine compressor had been cleared for flight duty, therefore, is no guarantee that blade vibration troubles will not be experienced when operating at low speeds, as may be necessary in naval applications.

One of the important points which it was hoped to establish from the trials of the *G2* gas turbines was the behaviour of the ball and roller bearings fitted to these engines. Unfortunately the experience in *Bold Pathfinder* has been masked by an extremely severe hull vibration which occurs under certain conditions when turning and caused two failures of the power turbine bearings during the early operation of the boat.

Investigations were made into the hull vibration and its effect on the engine. The analysis showed that a vibratory load, much greater than the normal thrust load, was occurring on the ball bearings. This caused the balls and cage to vibrate axially between the races and led to failure of the cage. Such vibration is most undesirable in ball bearings, especially with the air-oil mist type of lubrication which was employed initially. A change to flood lubrication of this bearing was made to improve the oil supply both under normal operation and when trailing. At the same time limitations on the operation of the boat have been imposed to prevent the hull vibration and no further bearing failures have occurred.

In *Bold Pioneer*, which has not suffered from this trouble, presumably due to the different hull form, no bearing failures have occurred.

' G.2 ' General Conclusions

There is no doubt that there have been serious teething troubles during the initial trials of the *G2* gas turbine at sea, many of which would have been avoided if the engines had been given a more thorough testing ashore. The successful and trouble-free running of *Gatric* had perhaps made the Admiralty over confident and the first *G2* was run for an aggregate of only 37 hours before carrying out the official acceptance test of nine hours prior to installation.

Nevertheless the difficulties experienced during the initial trials were not inherent in the principle of the gas turbine and the *G2* has again shown that, basically, the characteristics of the simple gas turbine are ideal for the propulsion

---

Note on ' Rotating Stall '. The explanation of this phenomenon is briefly as follows :—When a compressor blade row stalls it does so initially in patches, which tend to block the flow, and the air therefore diverges to each side of the patch. This has the effect of unstalling the blades in the row ahead of the patch and stalling those behind. The result is a rotation of the stalled patch in the direction of blade rotation but at a reduced speed. This rotation of the stalled patches excites the blades in the fixed and moving rows and they are liable to vibrate in resonance at excitation frequencies depending upon the number and rotational speed of the stalled patches, both of which can vary.

of high speed coastal craft. Other lessons learned to date from the sea trials of the *G2* are :—

(*a*) *Starting and flexibility of operation.* Air starting has proved quick and reliable, the time taken to reach idling speed being about 30 seconds under normal conditions. The rate of acceleration thereafter is servo controlled and, although the throttle lever can be moved ' instantaneously ' from idling to full power, the fuel flow is gradually increased over a period of about 12 seconds, corresponding to the maximum surge free rate of acceleration.

The automatic blow-off valves fitted to the compressor to avoid surge at low powers or when rapid changes of speed occur have been successful and trouble free in operation.

(*b*) *Compressor fouling.* Water spray arrangements similar to those installed in *M.G.B.2009* were fitted to the *G2*'s ; air being tapped from the compressor and used to blow distilled water into the spray ring fitted at the compressor inlet. This simple method has again proved extremely successful in restoring performance after salt spray fouling. The usual practice is to wash the compressors through daily at 5,000 r.p.m. using ten gallons of distilled water over a period of about three minutes. This frequency is not normally necessary from the performance point of view but is considered desirable in order to prevent corrosion.

(*c*) *Cooling down.* If the gas turbines have been operating at high power the gas generators are run for 5 to 15 minutes at 4,750 r.p.m. to cool the bearings down to a temperature of about 90°C (194°F) before shutting down. On occasions, however, the engines have been shut down immediately after high power running without consequent damage.

(*d*) *Instrumentation.* Accurate recording of gas temperatures is essential for the proper control of naval gas turbines. Several failures of gas temperature recording instruments have taken place in the *Bold* boats and false readings have occurred due to hull vibration at high speed. It may be advisable in future designs to record gas temperatures at the turbine outlet rather than at entry to the power turbine as in the *G2*'s. This will enable a more robust instrument (designed for lower temperature) to be fitted. It will also safeguard the turbines, as any internal failure will immediately result in a higher temperature at the end of the turbine blade path.

The Use of Simple Gas Turbines as Boost Units in Major Warships (11, 12)

Since major warships operate for only very short periods at high power, it is wasteful of weight and space to carry around heavy long life machinery whose full capacity is seldom used. A promising application for the gas turbine in naval vessels is therefore as a lightweight, short life ' boost ' engine for use at high powers, in conjunction with a base load or cruising engine. This conception of using simple gas turbines as ' booster ' units with more efficient longer life machinery for cruising is an important principle which avoids the need to install unduly heavy machinery solely to cover a range of powers which is seldom used in warships. The gas turbine is the only prime mover which can take full advantage of the short life required in booster units to reduce weight and space without increasing maintenance difficulties.

In *M.G.B. 2009* and the two *Bold* boats the gas turbines and cruising engines drive separate shafts and piston engines are employed for cruising, but the boost principle is not necessarily confined to arrangements of this kind. Steam turbines, additional gas turbines or free piston gas generators can be used for cruising and the boost and cruising engines can be coupled to the same shaft if desired.

In this connection it is interesting to note that a study has been made by Captain Simpson U.S.N. and Commander Sawyer U.S.N. for a 30,000 h.p. naval propulsion plant comprising 9,000 h.p. of steam turbine machinery and 21,000 h.p. of lightweight 'boost' gas turbines connected to the same gear train through clutches (11). The steam plant is intended to supply power up to a ship's speed of 20 knots after which the gas turbines would be cut in. It is estimated that this arrangement would reduce the weight of propulsion machinery in a destroyer by 28 per cent and reduce the engine room length by 10 feet. It would also be possible to design the steam plant for good economy at the low speeds for which it alone would be employed. If the gas turbines could be fitted with reversing arrangements a further advantage would be the possibility of proceeding to sea in a matter of minutes should some unforeseen emergency arise.

The characteristics required of boost gas turbines are extreme lightness and compactness, reliability and reasonable efficiency at high powers with minimum air requirements. The life can be very short judged by normal standards. These qualities are similar to those of aircraft gas turbines and in this field the Navy is therefore in the happy position of benefiting directly from the vast aircraft engine development programme financed by the Ministry of Supply.

The development of naval gas turbines for main propulsion machinery presents a more difficult problem than the boost application. Nevertheless the gas turbine may offer sufficient advantages, particularly in the power range between 5,000 h.p. and 10,000 h.p., to warrant developments of this type. Two naval gas turbines in this category have been built and tested under the code names of *E.L.60A* and *R.M.60.*

'E.L.60A' MAIN PROPULSION GAS TURBINE

(*Appendix A, column 3*)
(*Appendix B, diagram 3*)
(*Refs. 13, 14*)

Introduction

A contract was placed with the English Electric Co., Ltd., Rugby in September 1946 for a gas turbine plant (known as *E.L.60A*) suitable for marine propulsion. The plant was intended to replace one set of steam machinery in the frigate, H.M.S. *Hotham,* a Lend/Lease vessel which the United States kindly allowed the Admiralty to retain after the war for this special purpose. The *Hotham* was originally fitted with steam turbo-electric machinery developing 6,000 h.p. on each of two shafts, and appeared particularly suitable for a gas turbine installation since reversing was already available, the power and alternator speed were reasonable, and a direct comparison with steam machinery could be made.

The main object of the contract was to obtain sea experience with a long life gas turbine plant at an early date. It was therefore decided to base the design as far as possible on existing knowledge and techniques. A light weight set of advanced design was thus out of the question and, in many ways, it was desirable that the weight of gas turbine plant should be similar to that of the steam machinery it was to replace. The *E.L.60A* was designed to drive the *Hotham's* starboard propulsion alternator at its original design speed and power, and the layout was adapted to fit in the existing forward engine and boiler room.

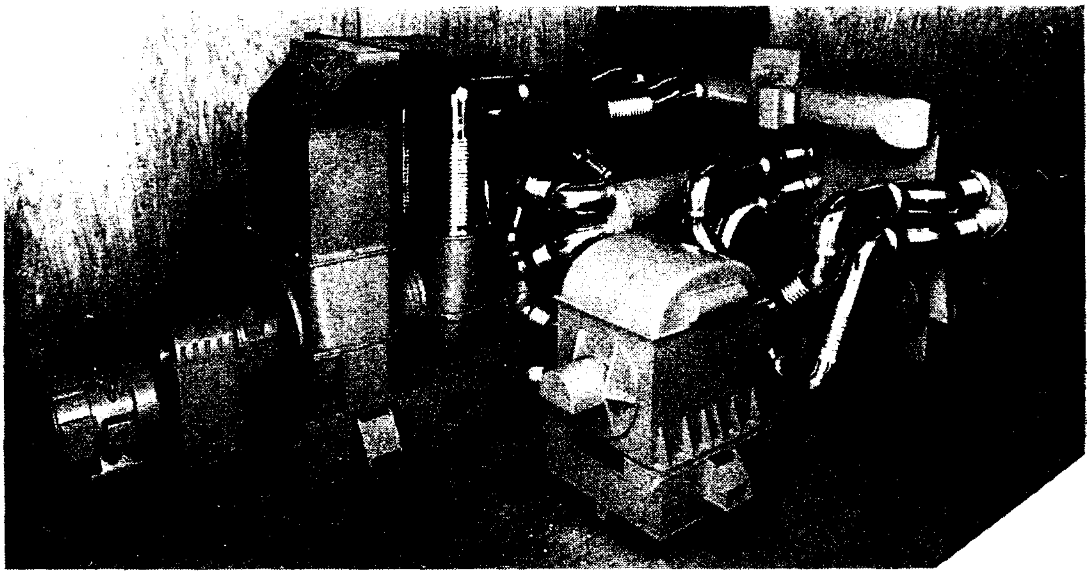

Fig. 12—Model of ' E.L. 60A'—Main Propulsion Gas Turbine

Cycle

The cycle adopted was a simple cycle with heat exchange, the compressor (or charging) turbine being in parallel with a geometrically similar but smaller power turbine driving the alternator. The maximum gas temperature at inlet to the turbine was 704°C (1,300°F) and the heat exchanger was designed for 75 per cent heat recovery. Fig. 12 shows a model of the complete *E.L.60A* gas turbine with details of ducting, starting motor, and main alternator, etc., while photographs of the actual set in the manufacturer's test house are shown in Figs. 13 and 14.

Adoption of a parallel-flow cycle solved the problem of providing an efficient 6,500 h.p. power turbine running at the alternator synchronous speed of 5,600 r.p.m. since only one third of the total mass flow passed through the power turbine. This cycle was also felt to meet the requirements for rapid manufacture, and the pressure ratio necessary for efficient operation was within the range of operating experience for axial flow compressors. Manœuvring was also attractive since any power from full to zero could be obtained by manipulating the throttle and blow-off valves without altering the speed, mass flow, or pressure ratio of the compressor.

Control

Automatic control of the parallel-flow cycle of *E.L.60A* necessitated a complex system, the basic principles of which were as follows :—

Normal control was by means of a single lever regulating the speed setting of the power turbine governor. A movement of this lever in the ' increase speed ' direction started a small motor which increased the fuel supply to all combustion chambers at a predetermined rate until the power turbine reached the new governor speed setting.

A movement of the lever in the ' decrease speed ' direction had an immediate and a long term effect. The immediate effect was to reduce fuel supply to the power turbine combustion chambers and, if the required speed change was appreciable, to close the power turbine throttle valve and open a blow-off valve to atmosphere until the desired power turbine speed was reached. Rapid change

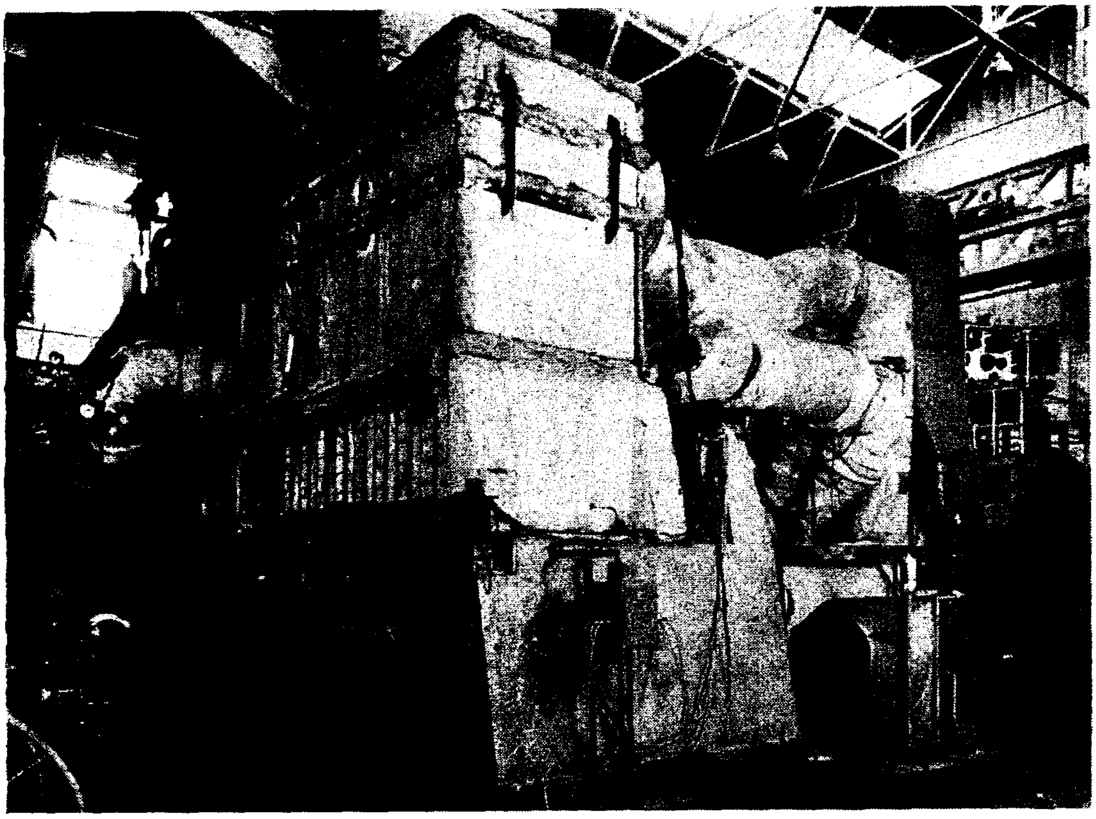

FIG. 13—‘ E.L. 60A’ GAS TURBINE IN TEST HOUSE—VIEW FROM HEAT EXCHANGER END

of output shaft speed could thus be effected without immediately disturbing the fuel setting of the charging set.

The longer term effect was a slow reduction in the fuel rate of the charging set and a consequent reduction in its speed. During this progressive reduction, the power turbine speed was held at its governed value by a progressive opening of the throttle valve and a proportionate closing of the blow-off valve. Ultimately the set was restored to the normal condition of unthrottled operation at the desired speed, with the blow-off closed. If necessary the long term effect could be cut out and the charging set allowed to run continuously at a chosen speed ; this condition met manœuvring requirements, as it enabled the time from ‘ Stop ’ to ‘ Full Power ’ on the power turbine to be reduced to a few seconds.

Starting

The 250 h.p. starting motor was capable of rotating the charging set at 1,000 r.p.m. without fuel, but the normal procedure was to light the combustion chambers at 300 r.p.m. and declutch the starting motor at 2,000 r.p.m. On a cold start the set would become self-driving in 5 minutes and could sustain full load about 15 minutes later.

Manufacture of Set

It was originally planned to complete the manufacture of the set by the end of 1948. However, as work proceeded it became apparent that a gas turbine of this nature could not be built using existing practice. Many of the manufacturing difficulties required the use of special techniques, some of which had to be developed or adapted especially for the job. All this caused considerable delay and it was not until 1949 that the first main component, the compressor, was

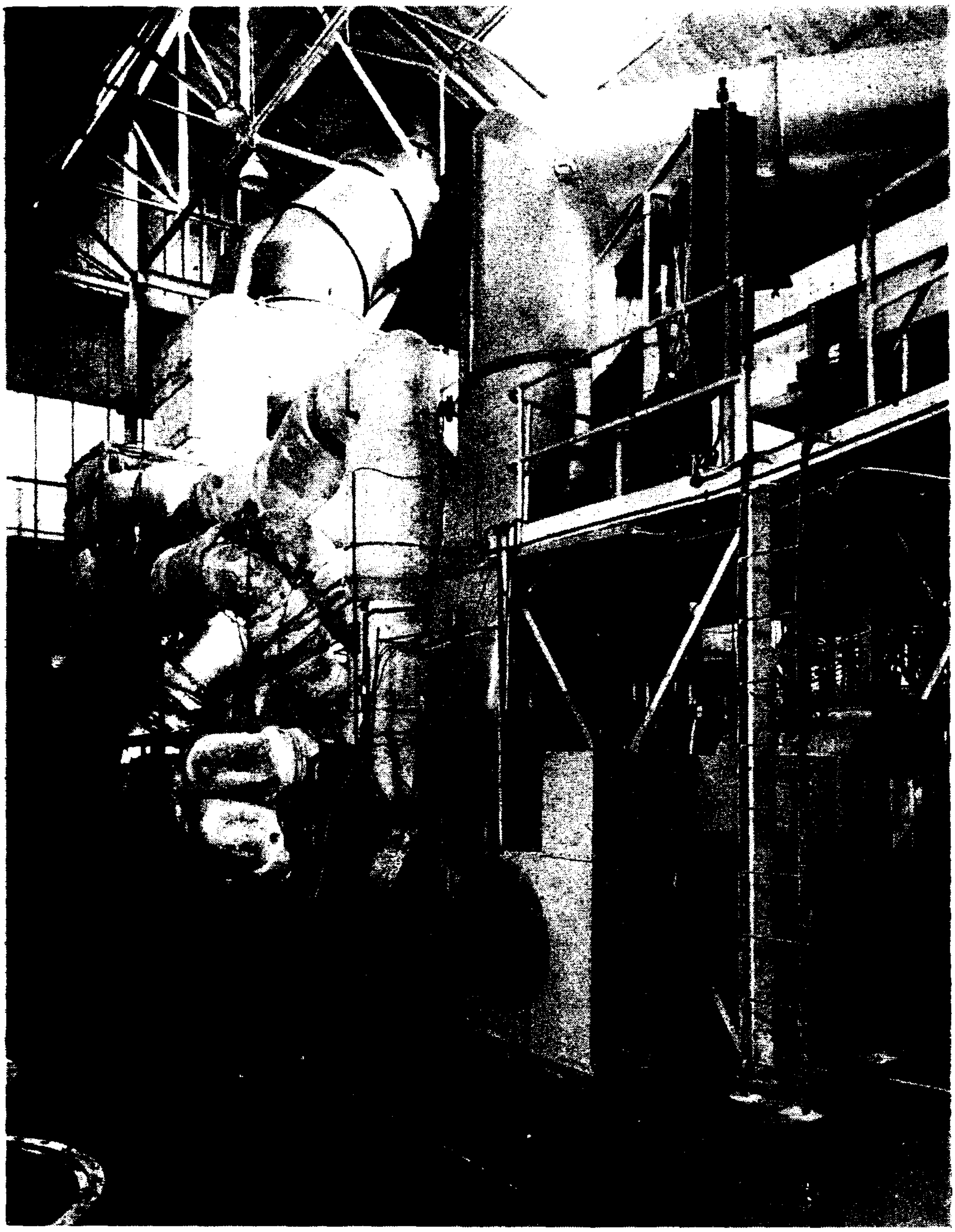

FIG. 14—'E.L. 60A' GAS TURBINE IN TEST HOUSE—VIEW FROM STARTER MOTOR END

ready for testing. At the designed operating point an overall adiabatic efficiency of 86·2 per cent was obtained which was considerably higher than expected. The mass flow was also in excess of the design value and modifications were necessary to ensure matching of the turbines. To achieve this the first stage of rotor and stator blades was removed from both turbines, thus increasing their capacities. It was hoped that any decrease in cycle efficiency caused by this modification would be offset by the increase in compressor efficiency compared with the design figure.

Further difficulties were encountered with the welding of the turbine rotors and it was not until September 1951 that the complete set was finally ready for shore trials. Thus the original object of obtaining early sea experience had not been achieved while the initial trials of the *R.M.60* had already indicated the potentialities of a lightweight gas turbine for warship propulsion. The heavier *E.L.60A* based on steam turbine practice had, in fact, become obsolete and it was realised that the set would never become a prototype for future naval gas turbine machinery. It was therefore decided to abandon the sea trials of the *E.L.60A* in the *Hotham* and to terminate the project at the conclusion of the first test runs ashore. The performance obtained on these initial runs is shown in FIG. 2, but it is only fair to point out that several significant and unnecessary losses were located on test; with further development these could have been eliminated and the consumption figures thereby substantially improved. On completion of the test programme in 1952 the set was stripped for a thorough examination of every component.

Lessons Learned

Although the original object of this gas turbine project was not achieved and the development was subsequently overtaken by more advanced designs, much valuable information was obtained, the more important points being as follows :—

(*a*) *General.* (i) The cycle used, designed physically and mechanically on steam turbine lines is intrinsically heavy. Even with complete re-design, it is doubtful if the weight could ever be reduced below about 50 tons or 17 lb/h.p.

(ii) Bearing in mind the weight of the moving parts and that the turbine casings are horizontally split and uncooled, the set appeared to be sufficiently flexible in operation for naval use, except that in the event of a surge it was necessary to slow the charging set down below the self-driving point before the plant could be put on substantial load again, and this operation took 5–10 minutes.

(*b*) *Compressor.* (i) A very sound compressor, both aerodynamically and mechanically has been developed, and the design could be confidently used as a basis for future projects.

(ii) It has been realised that a high efficiency over a wide range (over 85 per cent from pressure ratios of 1·5 to 4·2 obtained with this compressor) is often associated with a poor low speed surge line. Thus more efficient overall performance may result from improving the surge line by deliberate inter-stage blow-off at low speed operation rather than by attempting to improve the complete compressor surge line by blading modifications.

(*c*) *Heat Exchanger.* (i) The method of securing the tubes in the tube plates by induction brazing has proved satisfactory.

(ii) The cupro-nickel tubes have been corroded during the short duration of the tests and, so far as can be judged from this limited experience, the material appears unsuitable.

(iii) Correct spacing of the tubes between tube plates has been satisfactorily achieved by means of spiral wire spacers.

(*d*) *Combustion Chambers.* (i) The louvred can type combustion chambers developed by the Shell Petroleum Co. for the *E.L.60A* were the first of their type. They were most successful, producing perfect combustion without any trace of smoke above a preheat temperature of 300°C (572°F), and remaining completely free from any distortion or corrosion throughout the whole of the tests. Details of the chamber are shown in FIG. 15, and it will be observed that the louvred wall construction is achieved by packing together large numbers of truncated conical rings.

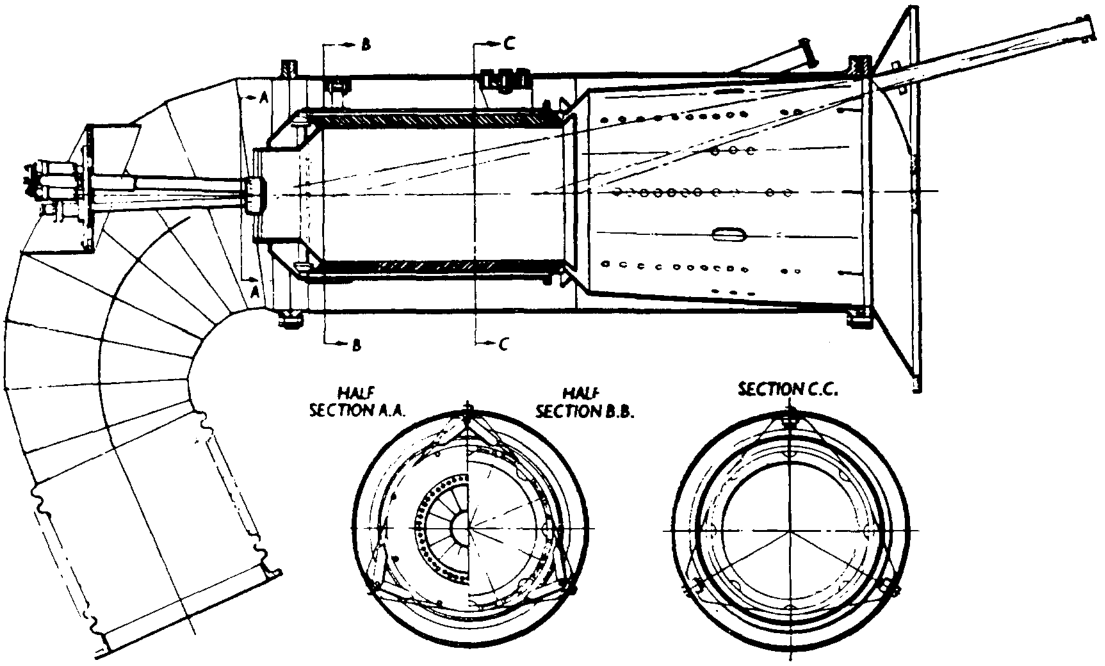

FIG. 15—DETAILS OF LOUVRED COMBUSTION CHAMBER FITTED IN 'E.L. 60A'

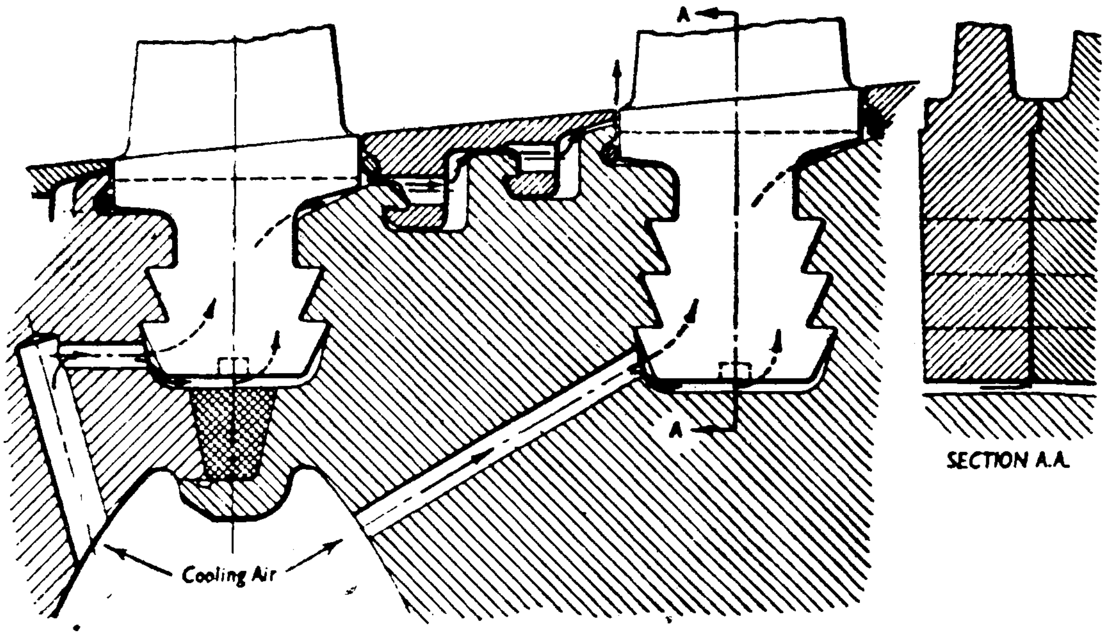

FIG. 16—DETAILS OF TURBINE BLADE ROOT COOLING FITTED IN 'E.L. 60A'

(ii) Difficulties were experienced in matching the outputs of the multiple combustion chambers. (Unless this can be achieved the turbines are liable to be locally overheated.) The matching was particularly difficult at low powers where the individual burner output was very sensitive to minor manufacturing errors, burrs, etc.

(*e*) *Turbines*. The turbine rotor and blade root cooling system (details of which are shown in FIG. 16) proved extremely effective, although complicated to construct. Air tapped from the compressor delivery was, after filtration, fed into the centre of the rotors. The air then passed outwards to the blade roots and the spaces beneath the segmented disc

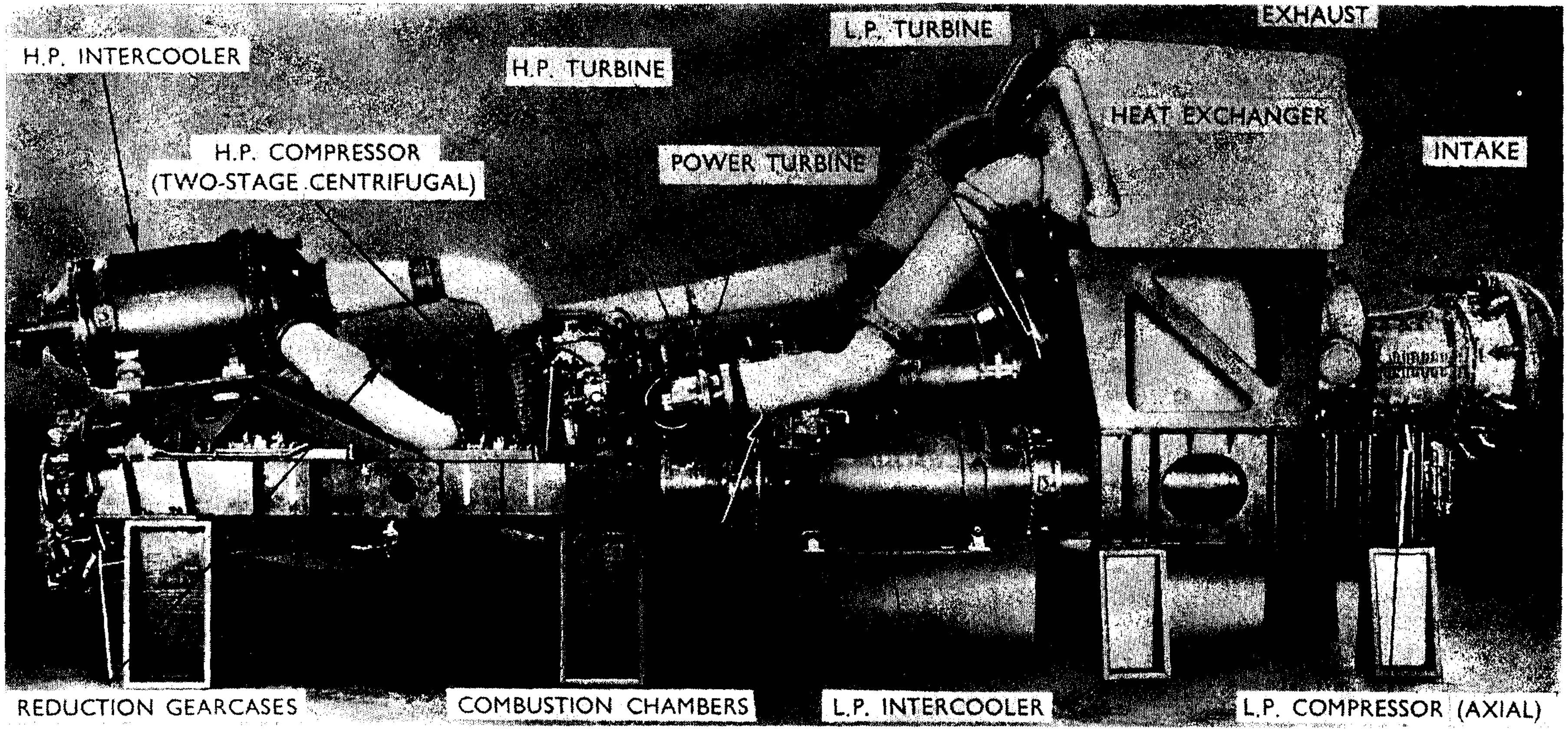

FIG. 17—' R.M. 60 ' MAIN PROPULSION GAS TURBINE

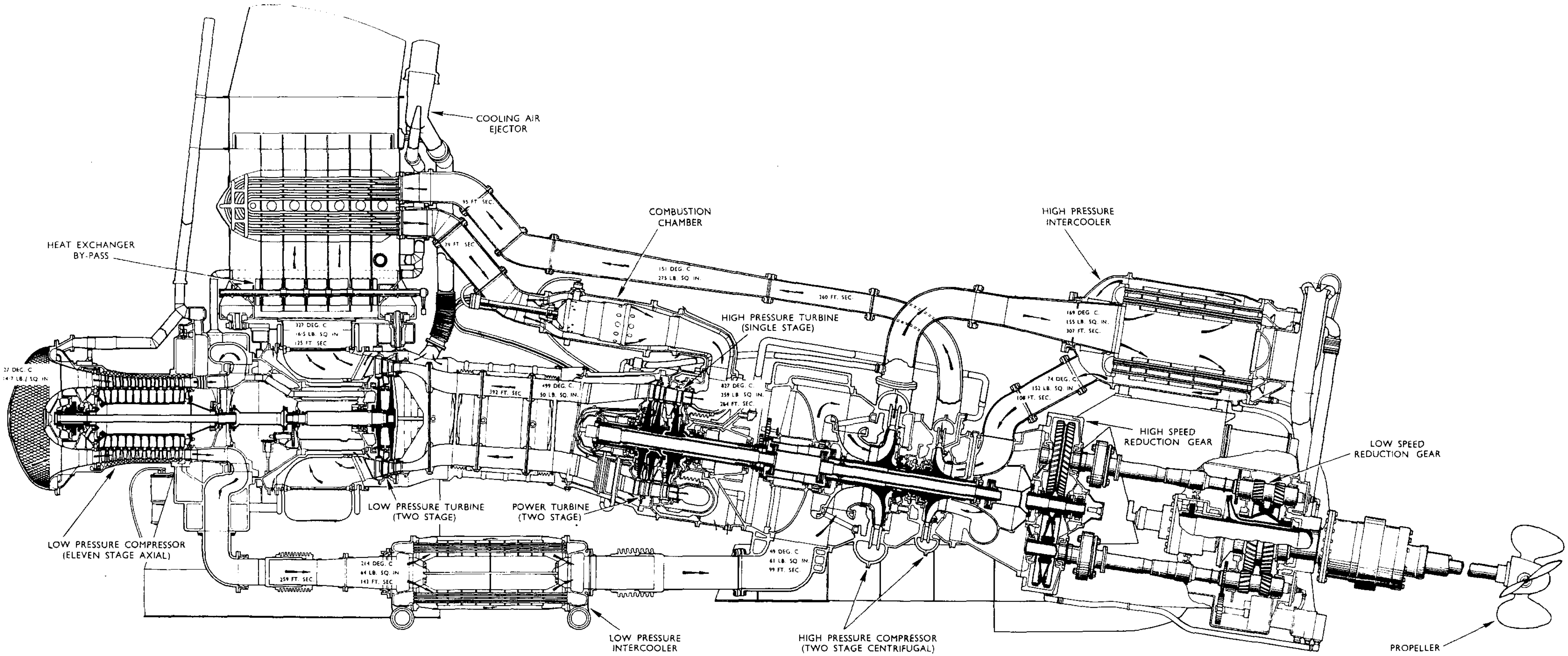

Fig. 18—Diagrammatic Section Through 'R.M. 60' with details of Pressures, Temperatures and Velocities throughout the Cycle

covers around the rotor periphery. By this means the rotor discs and the more heavily stressed parts of the blades were protected from direct impingement of hot gases. Fusible plugs indicated that the cooling system maintained the rotor everywhere at least 250°C (482°F) below the hot gas temperature. This highly effective cooling system, which required somewhat less than 2 per cent of the total air flow, would enable ferritic rotors to be used in future designs of this type.

Conclusion

The *E.L.60A* gas turbine did not achieve the original object of obtaining early sea experience with this new form of prime mover in a naval vessel. Nevertheless many valuable lessons were learned, perhaps the most important being that heavyweight gas turbines constructed on steam turbine lines are not suitable for naval machinery. In addition a number of components were developed which could be used in future gas turbine designs.

R.M.60 MAIN PROPULSION GAS TURBINE

(*Appendix A, column 4*)
(*Appendix B, diagram 4*)
(*Refs. 15, 16*)

Introduction

The second development in this category originated when Messrs. Rolls Royce approached the Admiralty with the suggestion that a gas turbine would be a suitable propulsion engine for coastal craft. Investigations were carried out by Rolls Royce under the direction of the Engineer-in-Chief and a contract for the design and development of a 6,000 h.p. naval gas turbine (known as the *R.M.60*) for use in coastal craft was placed in September 1946. The life of the engine was stipulated as 1,000 hours, comprising 300 hours at full power and 700 hours at 60 per cent power. It was later decided to install two of these engines in the gunboat *Grey Goose.* Design work started in December 1947 and in June 1951 the prototype *R.M.60* was on test. In the succeeding 3 months the engine completed 227 hours of trouble-free running during which period a power of 5,300 h.p. was achieved.

Description of ' R.M.60 '

In order to comply with naval requirements for economical low power cruising, it was found necessary to employ a high pressure ratio, with intercooling between each major stage of compression and a heat exchanger. A photograph and a diagrammatic sectional arrangement of the complete engine are shown in FIGS. 17 and 18 respectively. The engine comprises an 11-stage axial L.P. compressor discharging through twin intercoolers arranged in parallel, each of which has a thermal ratio of 86 per cent. The air then passes to the H.P. centrifugal compressor which is a two-stage design with an intercooler of 64 per cent thermal ratio between the stages. The H.P. compressor discharges to a compact ' U ' tube type heat exchanger which incorporates a partial by-pass valve on the gas side. From the heat exchanger the air is led to twin combustion chambers and thence to the single stage H.P. turbine, the temperature of the gases being 827°C (1,521°F). The gases then pass through intermediate (power) and L.P. turbines the output drive from the former passing through the H.P. turbine and compressors. From the L.P. turbine the exhaust gases pass through the heat exchanger or by-pass valve to atmosphere.

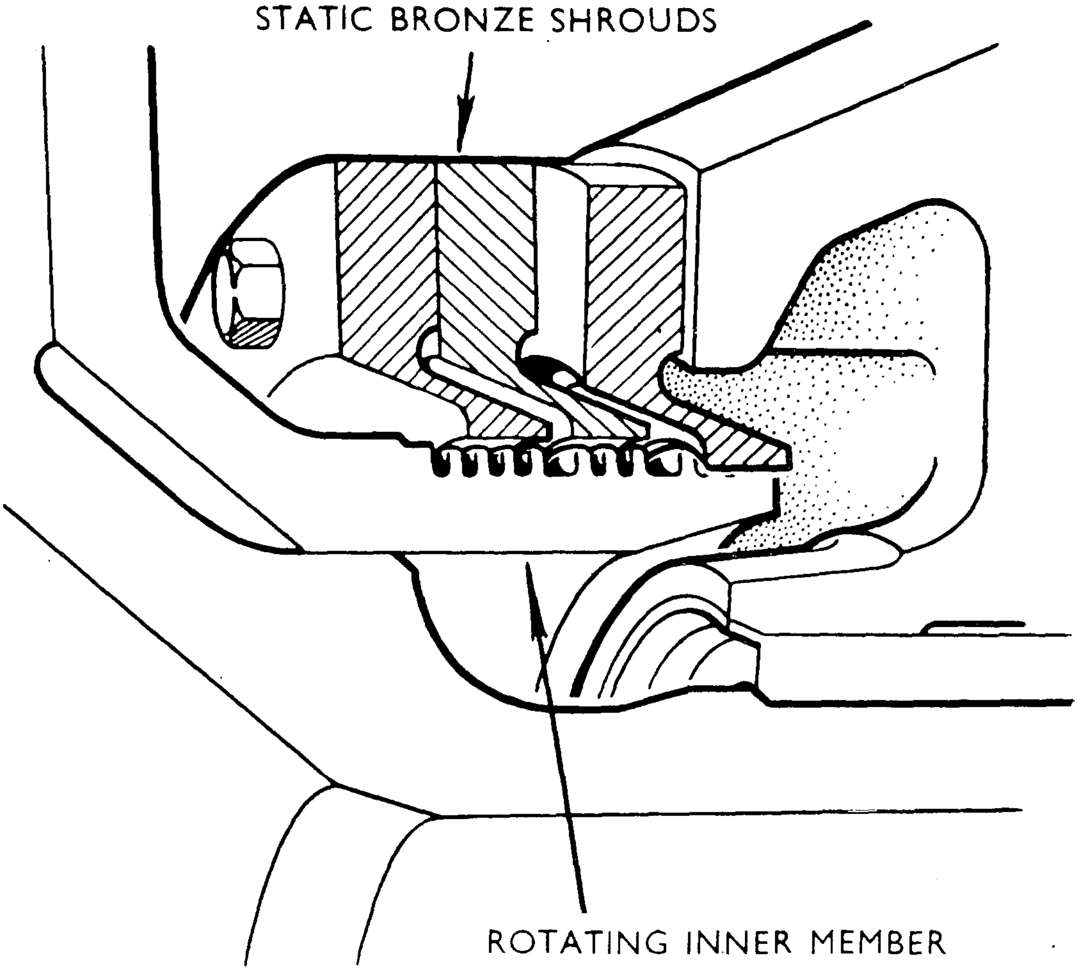

FIG. 19—DETAILS OF HIGH TEMPERATURE, HIGH PRESSURE SEALS USED IN 'R.M. 60'

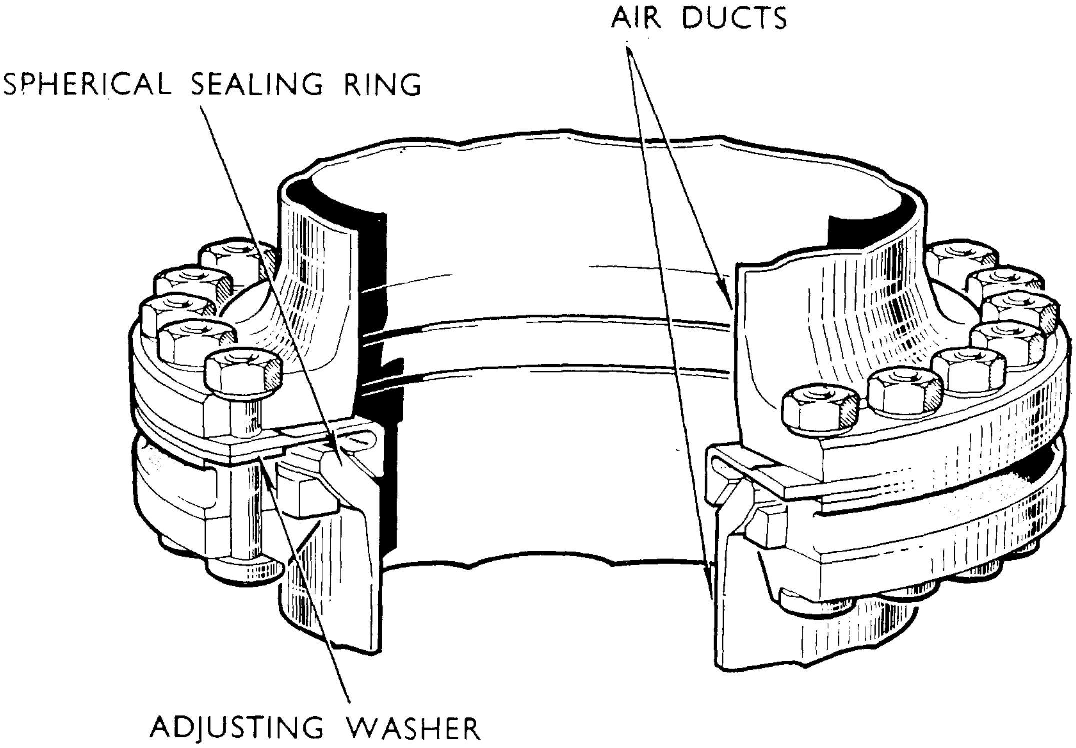

FIG. 20—DETAILS OF FLEXIBLE JOINT FITTED IN AIR DUCTING OF 'R.M. 60'

The straight compound cycle with intercooling, heat exchange and concentric turbines was chosen after an exhaustive analysis of various cycles and engine layouts. It is worth stressing that the comparison of different gas turbine designs, though a most interesting occupation, is also a most dangerous one. Quite a small error in the assumptions, particularly of losses in various parts of the system, can be magnified in the ensuing argument and lead to totally wrong conclusions. Although reheat appeared theoretically very attractive in these analyses for decreasing the bulk and air rate, it was not employed in the *R.M.60* for a number of practical reasons, the most important of which were :—

(*a*) The difficulties of control, especially of manœuvring, would be increased to a serious degree since two separate fuel supplies must be regulated independently.

(*b*) Design of the reheat combustion chamber is difficult since it must work over a very large range of air/fuel ratios and the only cooling air available is already very hot.

(*c*) Reheat increases the temperature of the comparatively large L.P. turbine where the stresses are already high.

Aero-engine practice has been adopted for the general principles of many components. This policy has resulted in a light and compact power unit with a specific weight (based on maximum power obtained on test) of 5·3 lb/h.p. (including double reduction gearing and all accessories).

Preliminary Development

In the development of a complex engine of this type, employing a higher pressure than any other open cycle gas turbine, and with a gas temperature which at the time had only been employed in simple cycles, it will be appreciated that there were a considerable number of unknowns. This gave rise to extensive work on test rigs before the design of the various components could be finalized. One important requirement was for a high pressure, high temperature seal, and the type finally adopted, which has been used extensively throughout the engine, is shown in FIG. 19. The ' concentric ' design eliminated nearly all the problems with hot ducts (at the expense of a concentric shaft and buried bearings) but one that remained was to provide sufficient flexibility in the duct between the heat exchanger and the combustion chambers. This was satisfactorily solved by the design of flexible joint shown in FIG. 20, this type of joint being also used for the cold ducts connecting the H.P. compressor, intercooler, and heat exchanger.

Another difficult problem was to design a burner which would cover the whole load range of the engine, necessitating a turn-down ratio of 30 to 1. This range is far too great for a simple pressure jet burner and an ingenious triple burner was developed in which three concentric pressure jet atomizers are brought into use in sequence as the pressure in the fuel line rises. The *R.M.60* was only required to burn distillate fuel and the fuel system was therefore largely based on the use of aero engine components.

The division of the engine into separate units lent itself to testing the H.P. unit on its own, particularly as the power turbine was fitted immediately adjacent to the H.P. turbine and was, in fact, part of the same unit. The H.P. or ' cruising unit ' was first run in 1950 and 640 hours testing was carried out before assembling the complete engine. No major mechanical trouble was experienced, but minor modifications were necessary to the blading of the power and compressor turbines to obtain correct matching and reduce proneness to surging.

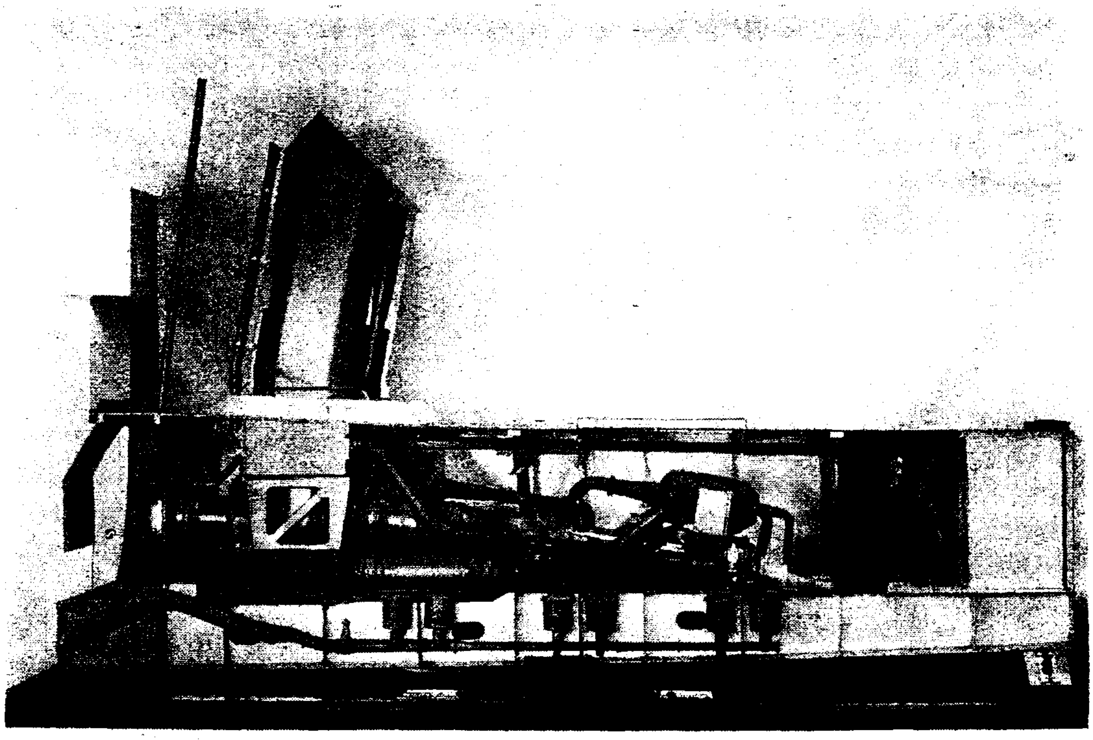

FIG. 21—MODEL OF ‘R.M. 60’ IN ‘GREY GOOSE’

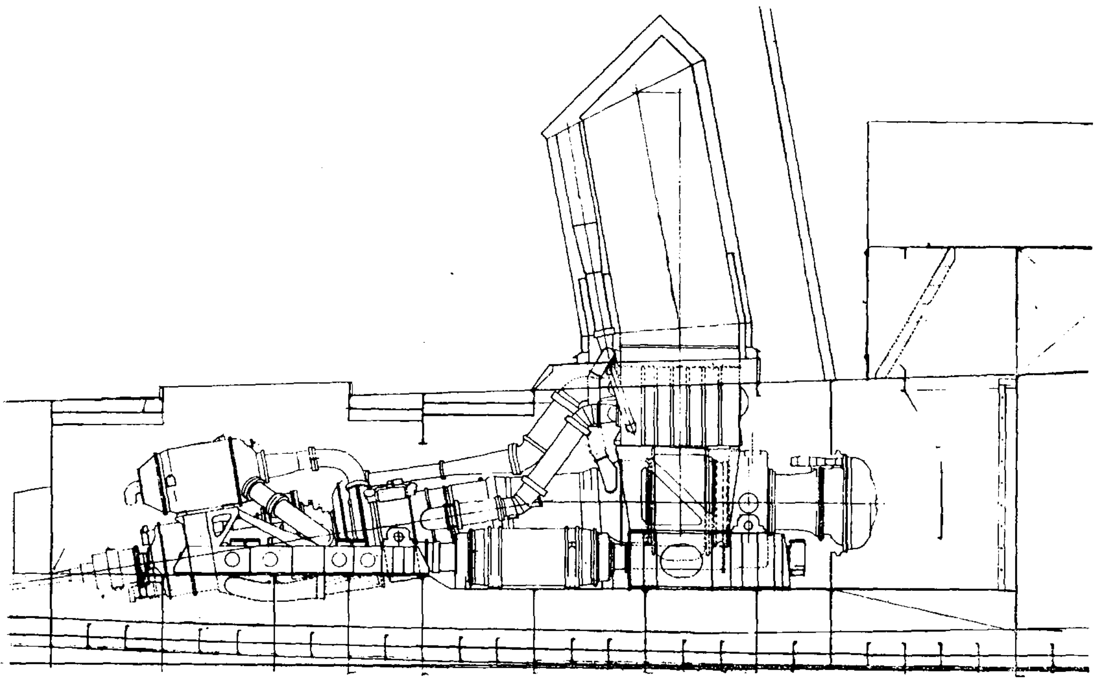

FIG. 22—INSTALLATION OF ‘R.M. 60’ IN ‘GREY GOOSE’

Testing of the Complete Engine

Development running of the complete *R.M.60* engine began in June 1951 and on the first occasion of opening up the throttle a power of 5,300 h.p. was achieved. Testing of the engine continued over a period of two years and a total of 1,100 operating hours (in addition to the 640 hours on the cruising unit) was amassed, during which time the characteristics of the engine were studied, the performance improved and the reliability tested.

At the time of writing two *R.M.60* gas turbines are being installed in the gunboat *Grey Goose* by Messrs. Vosper of Portsmouth and sea trials are expected to commence shortly. FIG. 21 shows a half sectioned model of the installation, and a line drawing giving the positioning of the engine in the hull is shown in FIG. 22. (In the actual boat installation the control room has now been re-sited on the upper deck.) By installing these engines in *Grey Goose* a considerable increase in power has been achieved with a reduction of 50 per cent in total machinery weight and a saving in space compared with the original steam installation, which was the lightest ever produced for naval purposes. (17.)

Performance Achieved

The specific fuel consumption achieved by the *R.M.60* engine during shore trials is shown in FIG. 2, the power with a 15°C (59°F) ambient air temperature being 5,400 h.p. and with a 27°C (81°F) air temperature 4,900 h.p., these powers being obtained with the heat exchanger by-pass open. This performance fell short of the original design estimate but, taking into account the advanced nature and complexity of the engine, the trial results have been most satisfactory. It has been established beyond doubt that the cycle chosen does enable a single gas turbine to maintain a good performance over a wide range of power. The rise of specific fuel consumption at the higher powers (see FIG. 2) emphasizes the price which must be paid if a small and compact heat exchanger incorporating a by-pass is used. For naval applications this price is acceptable since only a small percentage of a warship's operating life is spent at high powers.

Experience gained with ' R.M.60 '

(*a*) *Manœuvrability.* The engine is started by an electric motor rated at 40 h.p. for 30 seconds. The whole starting sequence is automatically set in motion by a push button in the control room and the engine reaches idling speed in less than 30 seconds. During shore testing of the *R.M.60* the rate of acceleration and deceleration has had to be limited to avoid overfuelling or compressor surge. The time required to increase from idling to full power is about 45 seconds, and about 40 seconds is necessary to reduce from full power to idling. These times were obtained on the test bed with a ' clean ' engine, and the dash pot fitted in the throttle control for the ship installation has a 60 second rate for both acceleration and deceleration, to allow some margin for fall-off in compressor performance. This limitation on the flexibility of the *R.M.60* is mainly due to the low inertia h.p. turbine and compressor being more responsive to throttle movements than the high inertia L.P. unit. In future designs the handling could be considerably improved by incorporating larger blow-off valves at maximum cycle pressure, arranged to open when the throttle is suddenly closed. Nevertheless the experience with *R.M.60* has shown the need for consideration in the early design stages of the naval requirement for rapid manœuvring.

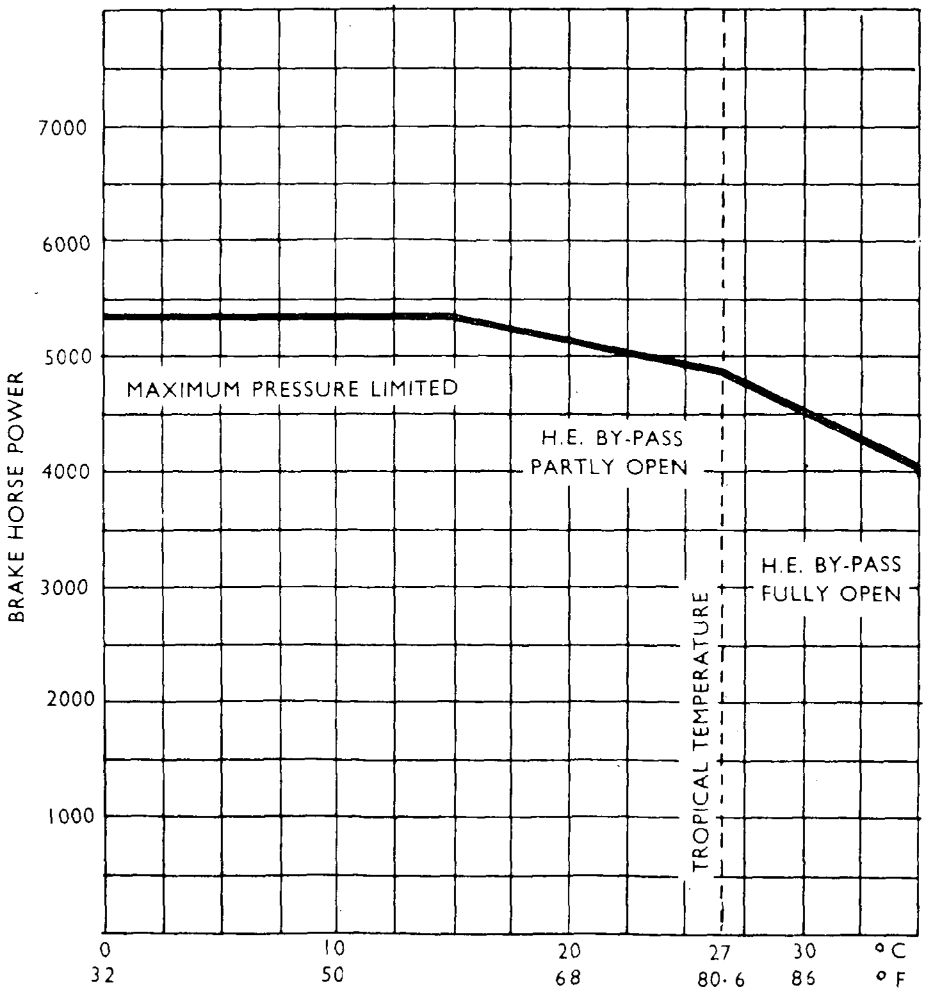

Fig. 23—R.M.60—Power Variation with Ambient Temperature

(*b*) *Bearings.* The rotors of the three turbines and two compressors are carried in ball and roller bearings and during test bed running these bearings have probably caused more concern than any other component. A number of failures have occurred and the H.P. turbine thrust bearing has been particularly troublesome. It is extremely difficult to predict the value of the thrust on this bearing accurately and when surging occurs even its direction is uncertain. In the final design the capacity of the thrust bearing has been increased and the rate of control of the engine limited to avoid surging. Failures with other bearings have been cured by modifications to the cages and improved lubricating arrangements. Nevertheless experience with *R.M.60* has again shown that ball and roller bearings cannot give the life and reliability required for the main propulsion gas turbines of naval vessels.

(*c*) *Erosion of H.P. compressor impellers.* After the first 220 hours running, severe erosion of the aluminium impellers of the H.P. centrifugal compressor was experienced. This was caused by the water droplets condensed from the atmospheric air in the intercoolers. Various anodizing and lacquering processes were tried without success and, as it was impracticable to fit a water separator, the impellers and diffuser vanes were replaced in stainless steel. This prevented erosion for the remainder of the test bed running, but in salt laden atmospheres further difficulties may arise and there will undoubtedly be material problems in the H.P. compressors of intercooled naval gas turbines. It may be desirable to fit some form of water separator if a compact unit with low pressure loss can be developed.

(*d*) *Effect of ambient temperature.* Like all gas turbines *the R.M.60* is very sensitive to variations in ambient air temperature and, in this particular case, sea water temperature also, as it is an intercooled design. FIG. 23 shows this effect and it will be seen that power falls off rapidly above an ambient temperature of 27°C (81°F). (In the *R.M.60* the power is limited to 5,400 h.p. below 15°C (60°F). This large variation in power with ambient temperature raises problems in naval installations, since warships must normally be capable of operating satisfactorily in arctic or tropical climates.

(*e*) *Heat Exchanger.* During one period of 320 hours running the thermal ratio of the heat exchanger deteriorated appreciably, due to the build up of soft carbon on the gas side. This occurred during early development running when combustion was by no means perfect. It is a pointer, however, that even when burning distillate fuel it may be necessary to clean the gas side of the heat exchanger at fairly frequent intervals.

(*f*) *Controllable Pitch Propeller.* Reversing of the two *R.M.60* gas turbines installed in *Grey Goose* will be carried out by means of *Rotol* 3-bladed controllable pitch propellers. Shore trials of the *R.M.60* have shown that very little improvement in performance can be obtained by operating at power turbine speeds away from the propeller law. Thus the original proposal to vary the pitch throughout the power range has been dropped and the propellers will be used for reversing only. It has also been decided that the propellers will reverse through the feathered position rather than through zero pitch. A mechanical stop will be fitted to prevent the blades taking any finer pitch than that required for ahead operation and, on reversing, the coarsening of the pitch to feather will act as a brake on the shaft system. Thus there will be no tendency for the output turbines or shaft system to overspeed when manœuvring.

(*g*) *Noise.* The *R.M.60*, as built and tested, is undoubtedly noisy. The highest noise level of 120 decibels occurs at the H.P. compressor and appears to be excited by the centrifugal impeller vanes and resonances from the small bore ducts taking air at high velocity from the compressor. These ducts are very thin, and considerable noise reduction could probably be achieved by increasing the wall thickness and fitting insulation. When fitted with a closed intake duct the forward part of the engine is distinctly quieter at 110 decibels. It is considered that, with the experience from *R.M.60*, a new design of engine should be possible giving a much lower all round noise level without sacrificing performance.

Conclusions

At the time of writing the *R.M.60* has not been tried at sea so it would be premature to draw any sweeping conclusions on the future of this type of gas turbine for warship propulsion. Nevertheless the first development project of this kind has produced an engine of 5,400 h.p. with a specific weight of 5·3 lb/s.h.p. (including reduction gearing) and a fuel consumption below 0·65 lb/s.h.p./hour over the whole range from 25 per cent to full power. These characteristics are suitable for a number of naval vessels but at present the life of the *R.M.60* limits its application to coastal craft. It is worth noting, however, that on the basis of normal warship operation the life of the hot parts would be nearer 10,000 hours than 1,000 hours for the same maximum gas temperature.

To improve the life and reliability plain journal and thrust bearings will be necessary, causing increased weight and mechanical losses. The specific fuel consumption could be restored by the use of a larger heat exchanger, however, but the additional power absorbed by the bearings would be lost.

Criticism may be levelled at the complexity of the concentric shaft arrangement, but, apart from early teething troubles, this feature in itself has caused no concern during test bed running, and the simple aerodynamic form of the engine which it makes possible largely accounts for the satisfactory performance which has been achieved.

When considering the future of this type of gas turbine it must be realized that the increase in size and complexity of modern fighting equipment has made the need to reduce the weight and bulk of machinery increasingly important, particularly in smaller warships where machinery weight represents a large proportion of the total displacement. The range of powers normally associated with these smaller warships, say 5,000 h.p. to 15,000 h.p. is precisely that in which neither steam turbine nor Diesel machinery shows to best advantage. The lightweight Diesel has not yet been successfully developed to meet these powers, while the specific weight of steam turbine installations increases rapidly below 15,000 h.p. It is in this field that the gas turbine is first likely to supplant existing prime movers as the sole propulsion machinery for warships.

The naval requirement for high efficiency over a wide range of power can be met either by a single complex gas turbine of the *R.M.60* type or by an installation comprising a number of simple gas turbines, each of which is designed to operate over its peak efficiency range. More operating experience will be necessary before deciding which of these arrangements will ultimately be adopted.

The concluding part of this paper will be published in the next issue of the Journal.

APPENDIX 'A' (PART I)

DESIGN DETAILS OF BRITISH NAVAL GAS TURBINES

Column Number		1	2	3	4
Engine		Gatric	G2	E.L.60A	R.M.60
Maker		Metropolitan Vickers	Metropolitan Vickers	English Electric	Rolls Royce
Maximum power at 15°C (60°F) air inlet temp. : h.p.		2,500	4,500	6,500	5,400
Duty		Boost Propulsion	Boost Propulsion	Main Propulsion	Main Propulsion
Cycle (see Note 1)		1/LP	1/LP	1/P/E	2SC/IP/IE
Turbine inlet temperature at maximum power. °C °F		750°C 1,382°F	800°C 1,472°F	704°C 1,299°F	827°C 1,521°F
Overall pressure ratio		3·5	4·0	4·02	18·5
Air flow at maximum power lb/sec.		47·5	65·6	128	64·6
Thermal efficiency at maximum power.		12·8	17·2	20·4	20·4
Thermal efficiency at 50 per cent power (see Note 2).		9·5	13·4	17·75	22·6
Specific weight lb/h.p. at maximum power (see Note 3).		2·77	2·28	27·2 excluding bedplates	5·3
Designed life of hot parts-hours (based on creep data).		300	1,000	10,000	1,000
Com-pressors	Number and type	1 Axial	1 Axial	1 Axial	1 L.P. Axial 1 H.P. 2 stage centrifugal
	Number of stages	9	11	15	11/2
Turbines	Number and type	2 Axial	2 Axial	2 Axial	3 Axial
	Number of stages	2/4	1/3	6/6	1/2/2
	R.P.M. ÷ 1,000	7·4/3·6	7·83/5·2	4/5·6	15/11/7·18
Number of intercoolers and thermal ratio.		None	None	None	3 (L.P. 2 in parallel) L.P. 86 per cent H.P. 64 per cent
Heat exchanger — thermal ratio		None	None	75 per cent	48 per cent at full power with bypass open
Number and types of combustion chambers.		1 Annular	1 Annular	6 Cans	2 Cans

Note.—1. Cycle notation adopted from Mallinson and Lewis' paper. (Reference 22.)

2. All thermal efficiencies are actual values obtained on test using Admiralty Diesel fuel (gas oil), calorific value 18,500 B.Th.U./lb. (10,300 C.H.U.s/lb.)

3. Specific weights quoted include reduction gearing (when fitted) and all engine-driven auxiliaries.

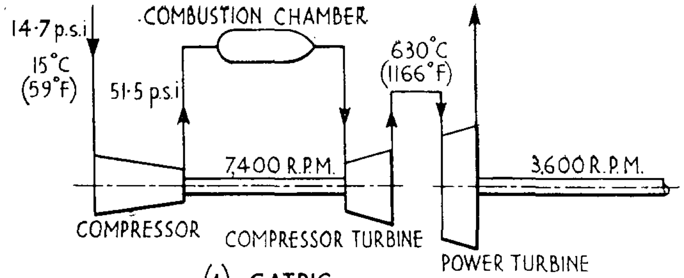

(1) GATRIC

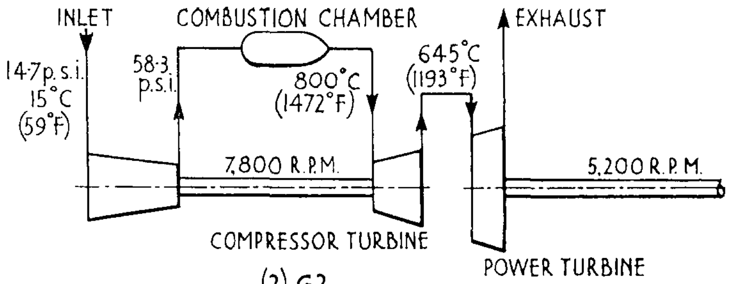

(2) G2

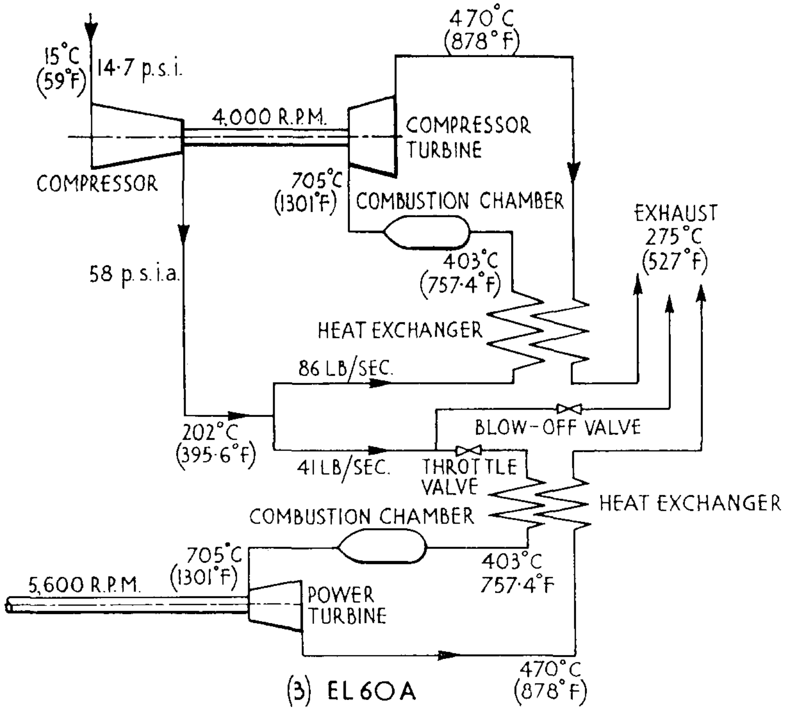

(3) EL6OA

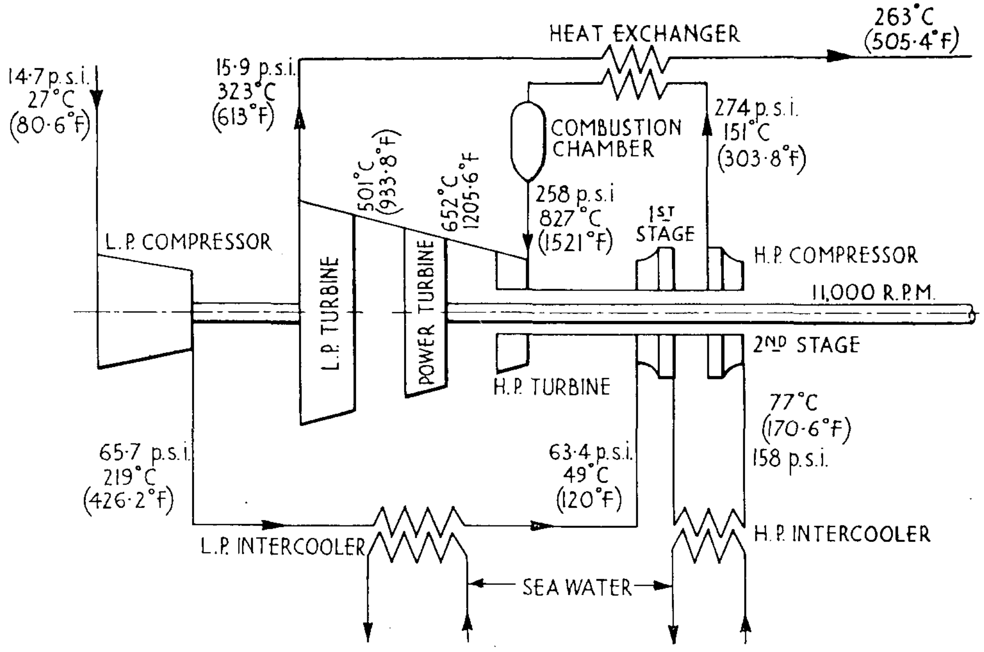

(4) RM.60

Appendix B, Part I—Cycle Diagrams for Admiralty Gas Turbines

As already stated, given all the errors, the mathematical solution is comparatively simple, but to assess the magnitude of the errors under varying aspects and conditions of attack is difficult. The errors vary proportionally as the speed, range and position of target during an engagement, whilst own speed and sea conditions affect the location and follow-up. Different methods and conditions of attack have to be considered, errors dependent on the circumstances of each attack allowed for, and the relative value of the attacks assessed by comparison of the ‘ probability of success ’ figures. The real value of this form of assessment is to provide comparative information as to the number and distribution of the defensive weapons needed and the tactical manœuvres necessary to give the best results.

Assessment of a new weapon has an added advantage in that fundamental data of use to the designer is made available, such as the weight of explosive required to cover a specified volume or area to effect damage on a target of known strength and size. To enhance the probability of success the explosive charge may be divided into a certain number of projectiles, either fired in a set pattern to cover a given area or at a time interval to give a coverage in time. Having determined the weight of explosive in each projectile, and allowed for the weight of arming mechanism, fuze, and container with the requisite ballistic properties to give stability, a reasonable estimate of the size and weight of the projectile can be obtained. Then with this estimate, and knowing the desired range and velocity of the projectile, the type of projector or propulsive medium can be selected.

The effect of the stabilization errors and the size of pattern will decide the axis stabilization and the power follow-up system required by the projector.

In conclusion, by mathematically assessing the probability of success of new weapons, it is possible to know the following essential features before adopting a particular scheme or system :—

(*a*) The limits of error acceptable in the location and prediction systems.
(*b*) The number of projectiles or size of pattern to effect a kill.
(*c*) The number of barrels or projectors needed.
(*d*) The number of mountings or projectors and their disposition in a ship to give the best defence.
(*e*) The types of stabilization and follow-up systems required.
(*f*) An estimate of the weight of the mountings and projectiles to be carried in a ship to deal with a specific number of attacks.